THIS DRAWING IS UNPUBLISHED. RELEASED FOR PUBLICATION –,– .
© COPYRIGHT – By – ALL RIGHTS RESERVED.

LOC	DIST
—	—

REVISIONS

P	LTR	DESCRIPTION	DATE	DWN	APVD
	F	HOUSING RESIN MATERIAL CHANGED	24DEC2013	TJ	JK

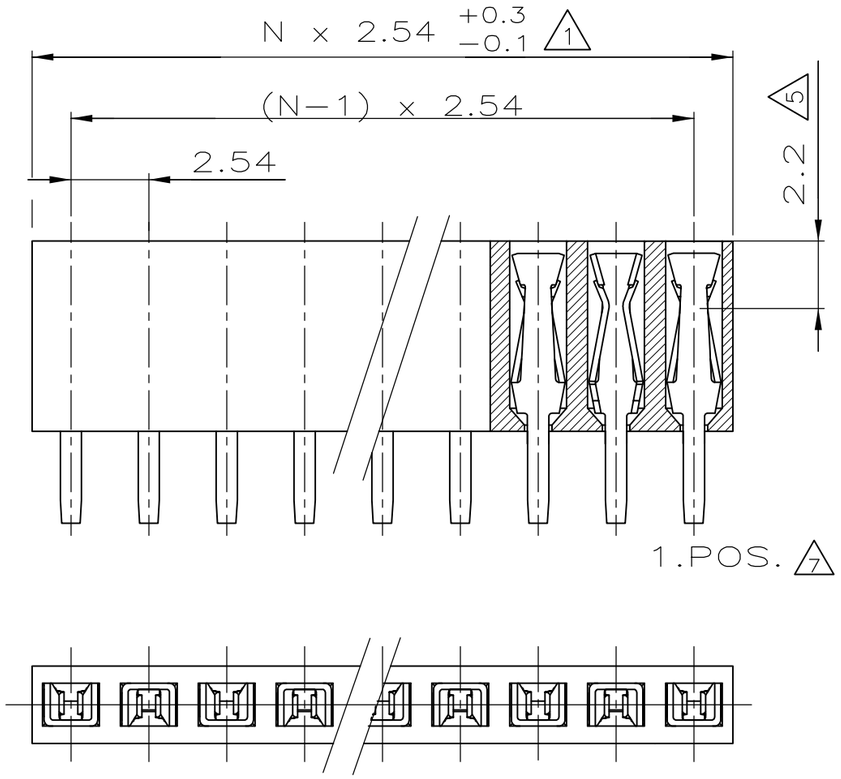

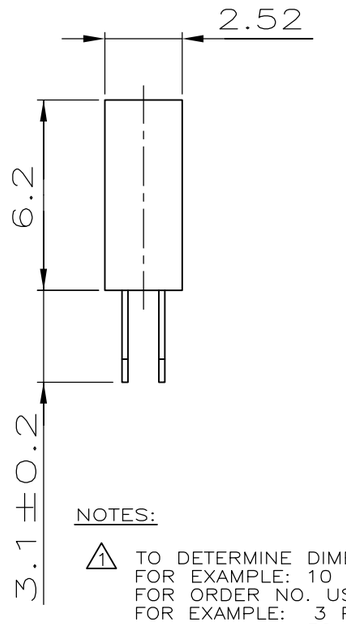

POLZ.	L	BESTELL–NR.	
–	–	–	
2	5.08	215 305–2	
3	7.62	–3	
4	10.16	–4	
5	12.70	~~–5~~	OBSOLETE
6	15.24	~~–6~~	OBSOLETE
7	17.78	–7	
8	20.32	~~–8~~	OBSOLETE
9	22.86	~~–9~~	OBSOLETE
10	25.40	~~1– –0~~	OBSOLETE
11	27.94	1– –1	
12	30.48	1– –2	
13	33.02	~~1– –3~~	OBSOLETE
14	35.56	~~1– –4~~	OBSOLETE
15	38.10	~~1– –5~~	OBSOLETE
16	40.64	1– –6	
17	43.18	1– –7	
18	45.72	~~1– –8~~	OBSOLETE
19	48.26	1– –9	
20	50.80	2– –0	
21	53.34	2– –1	
22	55.88	2– –2	
23	58.42	2– –3	
24	60.96	~~2– –4~~	OBSOLETE
25	63.50	2– –5	
26	66.04	2– –6	
27	68.58	2– –7	
28	71.12	2– –8	
29	73.66	2– –9	
30	76.20	~~3– –0~~	OBSOLETE
31	78.74	3– –1	
32	81.28	3– –2	
33	83.82	3– –3	
34	86.36	3– –4	
35	88.90	3– –5	
36	91.44	3– 215 305–6	

NOTES:

1. TO DETERMINE DIMENSIONS TAKE N = NO. OF POS.
FOR EXAMPLE: 10 POS.: N x 2,54 = 25,4 mm.
FOR ORDER NO. USE BASIC NO. + NO. OF POS.
FOR EXAMPLE: 3 POS.= 215 305–3 (SHORTEST VERSION)
36 POS.= 3–215 305–6 (LONGEST VERSION)

2. HOUSING MATERIAL: GREEN GLASSFILLED POLYESTER, UL 94V–0
CONTACT MATERIAL: PHOSPHOR BRONZE.

3. PLATING: UNDERCOATING: 1,3µm Ni.
AT CONT.PLACE: 0,8µm Au.
AT SOLDER–TYNES: 3.0–5.0µm Sn.

4. MATES WITH 0,63 SQUARE/ROUND MODU POSTS.

5. CONTACT–POINT.

6. RECOMMENDED P.C.BOARD–THICKNESS: 1,6mm.

7. PAY ATTENTION THE POSITION OF FIRST CONTACT
LAGE DES ERSTEN KONTAKTS BEACHTEN

8. HV100 CONNECTOR PACKED IN ANTISTATIC BLISTER TRAY

VIEW TO PCB–SOLDER SIDE
ANSICHT AUF LEITERPLATTEN–LöTSEITE

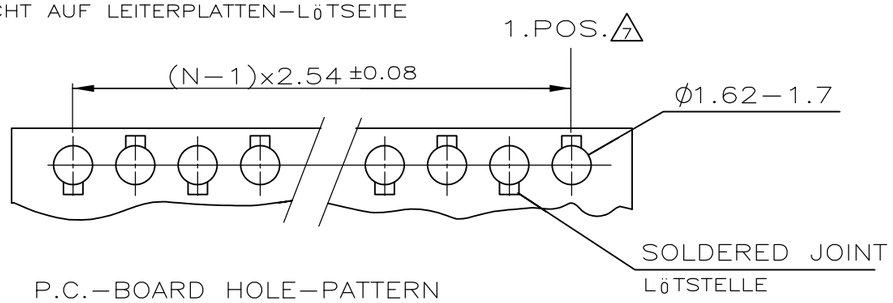

P.C.–BOARD HOLE–PATTERN
EMPFOHLENES BOHRBILD

RELEASED FOR PUBLICATION 14.8.1986

VERWENDET FüR
E 92–9803

THIS DRAWING IS A CONTROLLED DOCUMENT.

DIMENSIONS: mm

TOLERANCES UNLESS OTHERWISE SPECIFIED: ±0.1mm
0 PLC ± –
1 PLC ± –
2 PLC ± –
3 PLC ± –
4 PLC ± –
ANGLES ± –

MATERIAL: SEE NOTES 2
FINISH: SEE NOTES 3

DWN L.V.D.HEYDEN 20.05.86
CHK –
APVD –
PRODUCT SPEC 108–19056
APPLICATION SPEC –
WEIGHT –

TE Connectivity

NAME: HV 100 VERTICAL CONNECTOR SINGLE ROW, 6,2mm HEIGHT, BOTTOM/TOP ENTRY, GOLD.

SIZE	CAGE CODE	DRAWING NO	RESTRICTED TO
A3	00779	C–215305	–

CUSTOMER DRAWING | SCALE 5:1 | SHEET 1 OF 2 | REV F

THIS DRAWING IS UNPUBLISHED. RELEASED FOR PUBLICATION -,- .
© COPYRIGHT - By - ALL RIGHTS RESERVED.

LOC	DIST
—	—

REVISIONS

P	LTR	DESCRIPTION	DATE	DWN	APVD
	-	SEE SHEET 1	-	—	—

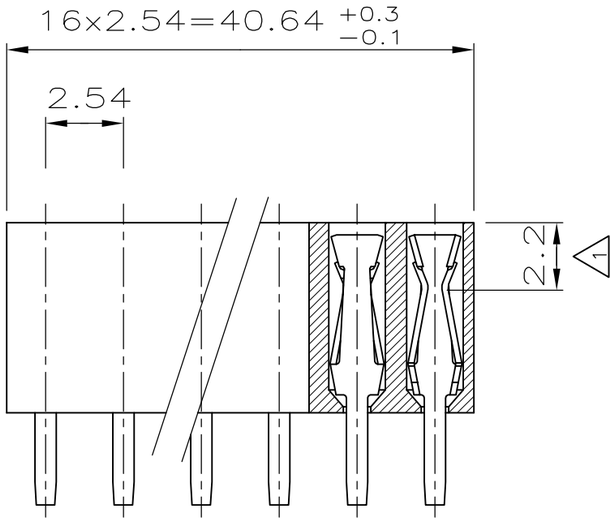

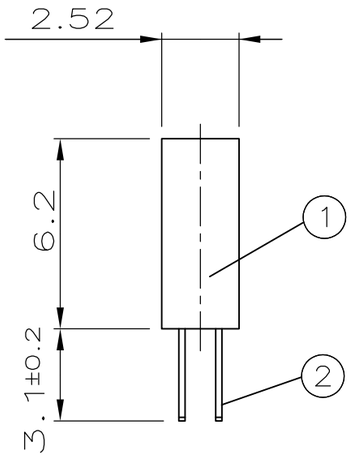

1.POS. 5

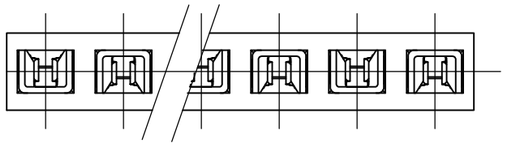

NOTES:

1. KONTAKTPUNKT
2. KONTAKTBEREICH:0.8µm GOLD ÜBER 1.3µm NICKEL
   LÖTBEREICH: 3.0–5.0µm ZINN ÜBER 1.3µm NICKEL
3. EMPFOHLENE LEITERPLATTENDICKE 1.6mm
4. STECKBAR MIT MODU II STIFTEN Ø/□ 0.63
5. LAGE DES ERSTEN KONTAKTS BEACHTEN
6. HV100 BUCHSENSTECKER VERPACKT IN ANTI-STATISCHEM BLISTER TRAY
7. OBSOLETE

ANSICHT AUF LEITERPLATTEN–LÖTSEITE

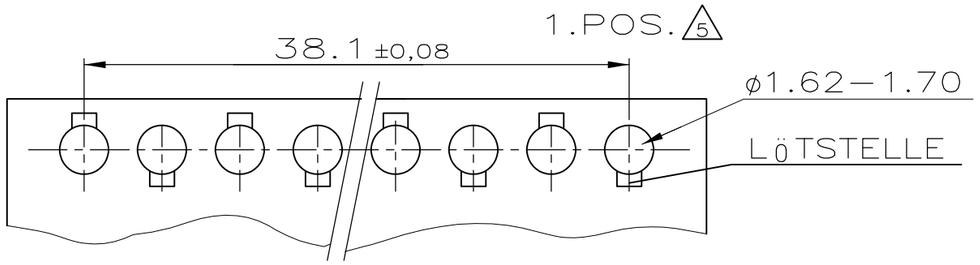

EMPFOHLENES BOHRBILD

7 6–215 305–6 WIE GEZEICHNET

NUR FÜR FA. DORNIER

ZEICHNUNG GÜLTIG AB KW 06/96

PART NUMBER	ITEM	NO.	PART DESCRIPTION	MATERIAL	FINISH
6–215305–6 7	2	16	HV 100 CONTACT	Cu Sn	2
	1	1	HV 100 HOUSING	PBTP GV	GREEN

THIS DRAWING IS A CONTROLLED DOCUMENT.

DIMENSIONS: mm

TOLERANCES UNLESS OTHERWISE SPECIFIED: ±0.1mm
0 PLC ± –
1 PLC ± –
2 PLC ± –
3 PLC ± –
4 PLC ± –
ANGLES ± –

MATERIAL –

FINISH SEE NOTE 2

DWN A.HO 01.08.91
CHK M.SCHAARSCHMIDT 01.08.91
APVD —
PRODUCT SPEC 108–19056
APPLICATION SPEC —
WEIGHT —

TE Connectivity

NAME HV 100 VERTICAL CONNECTOR, SINGLE ROW, 6.2mm HEIGHT, BOTTOM/TOP ENTRY, GOLD, 16 POS.

SIZE A3 | CAGE CODE 00779 | DRAWING NO C-215305 | RESTRICTED TO —

CUSTOMER DRAWING | SCALE 5:1 | SHEET 2 OF 2 | REV F

Mouser Electronics

Authorized Distributor

Click to View Pricing, Inventory, Delivery & Lifecycle Information:

TE Connectivity:

3-215305-6