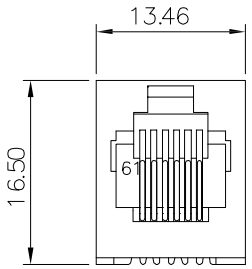

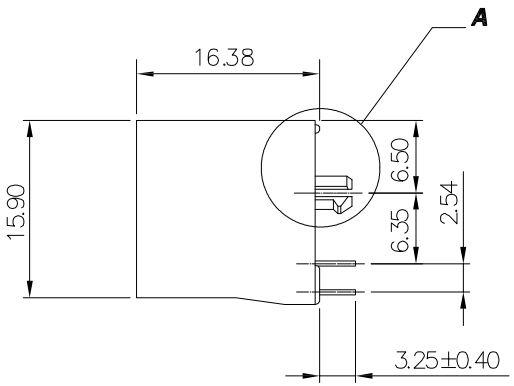

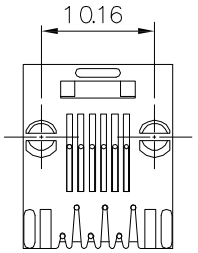

Specification:

1. Electrical Char
   - Insulation Resistance: 500MΩ min. 500V DC for 1 minute
   - Contact Resistance: 20mΩ max.
   - Rating Current: 1.5A max.
   - Rating Voltage: 120V AC
   - Dielectric Voltage: 1000 Vrms at 1MA 60 sec. min.

2. Physical Char
   - Housing: PBT Glass filled (UL 94V-0) Color: Black
   - Soldering Temperature: 235°C for 5 sec.
   - Spring Wire: 0.45mm Dia Phosphor Bronze 6u" Gold plating over Nickel
   - Temperature Range: -40°C to +85°C
   - Durability: 500 mating cycles min.

3. Packing: Tray

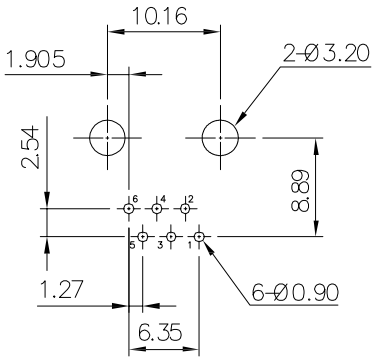

PCB LAYOUT
(Top View)

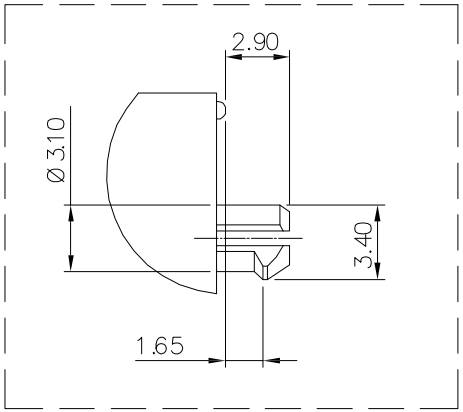

A(2:1)

RoHS compliant
Unit:mm

Scale	Free
TOLERANCE	
.XX	±0.20
.XXX	±0.13
.XXXX	±0.05
DIM	TOL
Angle	+0°30'

Id.	Modification	Date	Name
0	Drawn	12.06.2017	Amy

	Date	Name
Drawn	12.06.2017	Amy
Approved	12.06.2017	Amy

ASSMANN wsw components

Customer-No.

ASSMANN WSW-No.
A-2014-1-4-N-T-R

Drawing-No.
ASS 7328 CO

rev00

Replace

SHEET