THIS DRAWING IS UNPUBLISHED. RELEASED FOR PUBLICATION 2003
© COPYRIGHT 2003 - ALL RIGHTS RESERVED.

LOC	DIST
1	-

REVISIONS

P	LTR	DESCRIPTION	DATE	DWN	APVD
	A18	ECR-16-003426	07APR2016	SL	RR
	A19	ECR-16-003755	24MAY2016	KD	RR
	A20	ECR-16-016334	18NOV2016	FV	RR
	A21	ECR-17-009651	19JUL2017	RS	DC

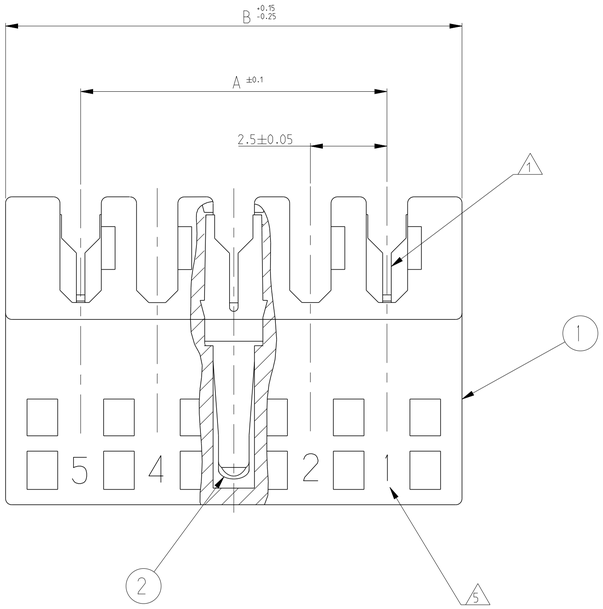

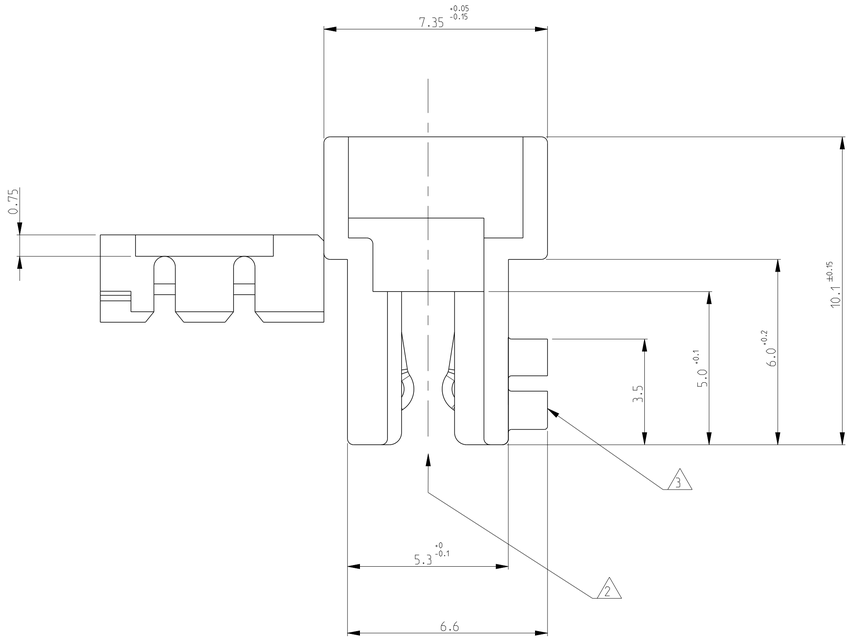

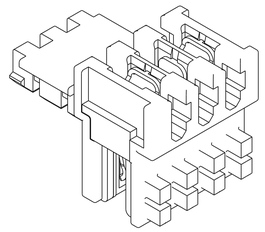

3D VIEW FOR REF. ONLY
3 POS. PN 0-284931-3 AS SHOWN
SCALE 5:1

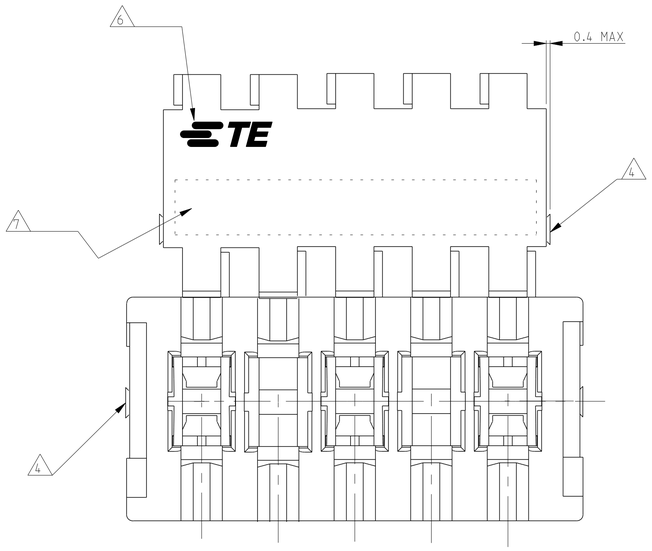

1. WIRE RANGE : STRANDED 0.22-0.35 mm² (INS. DIA. 1.30±0.1)
2. MATING PART: TAB HEADER P/N 829866;
   PCB FRAME P/N 964575 (PCB THK 1.5±0.14 COPPER CLADDING INCLUDED)
   SEE PRODUCT SPEC. 108-18056 FOR FRAME APPLICATION
3. KEYING RIBS TO BE REMOVED BY TERMINATION MACHINE
4. CUT OFF DIMENSION DUE TO PRODUCTION PROCESS
5. CIRCUIT No. IDENTIFICATION
6. TE TRADEMARK (OPTIONAL POSITION)
7. TAMPOGRAPHIC COLOUR CODE AREA (P/Ns IDENTIFICATION BEFORE CRIMPING)
8. PRELIMINARY PART NOT YET RELEASED FOR PRODUCTION
9. PBT GF
10. PBT GF, UL94-V0 & GWEPT 750 NO-FLAME, NATURAL

P/N 0-284931-5 AS SHOWN

	COLOUR CODE 7	CONTACT LOADING	HSG POS.	KEYING	DIM.A	DIM.B	9 TE P/N	10 REV
	BLUE	SELECTIVELY 1.2.3.4.5.6.7.8.9.10.11.13	13	2/3	30.0	34.9	1-284931-3	2311506-3
	BLUE	SELECTIVELY 1.3.5.7.9.11	11	-	25.0	29.9	1-284931-1	2-2311506-1
	BLUE	SELECTIVELY 1.3.5.7.8.10	10	-	22.5	27.4	1-284931-0	1-2311505-0
	GREEN	SELECTIVELY 1.3.4.6.8.9	9	-	20.0	24.9	2-284931-9	3-2311505-9
	BLUE	SELECTIVELY 1.2.4.6.7.9					0-284931-9	2-2311505-9
	GREEN	SELECTIVELY 1.3.4.6.7.8	8	-	17.5	22.4	2-284931-8	1-2311505-8
	BLUE	SELECTIVELY 1.2.3.5.6.8					0-284931-8	2311505-8
	GREEN	SELECTIVELY 1.3.5.6.7	7	-	15.0	19.9	2-284931-7	2-2311505-7
	BLUE	SELECTIVELY 1.3.5.7					0-284931-7	1-2311505-7
	BLUE	SELECTIVELY 1.2.4.6	6	-	12.5	17.4	1-284931-6	2-2311505-6
	RED	SELECTIVELY 1.3.4.6	6	-	12.5	17.4	0-284931-6	1-2311505-6
	GREEN	SELECTIVELY 1.2.3.5	5	-	10.0	14.9	4-284931-5	4-2311505-5
	RED	SELECTIVELY 1.5					3-284931-5	3-2311505-5
	-	SELECTIVELY 1.3.5					2-284931-5	2-2311505-5
OBSOLETED	~~BLUE~~	~~SELECTIVELY 1.3.5~~					~~0-284931-5~~	-
	RED	SELECTIVELY 1.3	3	2/3	5.0	9.9	5-284931-3	5-2311505-3
	BROWN	SELECTIVELY 1.3		-			4-284931-3	4-2311505-3
	GREEN	SELECTIVELY 1.3					3-284931-3	3-2311505-3
	-	SELECTIVELY 1.3					2-284931-3	2-2311505-3
	BLUE	SELECTIVELY 1.3					0-284931-3	1-2311505-3

Q.TY	MATERIAL	DESCRIPTION	ITEM
-	-	-	-
SEE TABLE	PH. BRONZE, TIN PLATED	IDC RECEPTACLE CONTACT	2
	PBT GLASS FIBER FILLED	FEMALE HOUSING	1
1	REVISIONE DELL'ASSEMBLATO (REVISION OF EACH ASSY NO)		
Q.TA' PER ASSEMBLATO (QTY REQ'D PER ASSY)	ELENCO DEI COMPONENTI (PARTS LIST)		

THIS DRAWING IS A CONTROLLED DOCUMENT.

DIMENSIONS: mm

TOLERANCES UNLESS OTHERWISE SPECIFIED:
0 PLC ±0.2
1 PLC ±0.2
2 PLC ±0.2
3 PLC ±
4 PLC ±
ANGLES ±1°

MATERIAL: SEE TABLE
FINISH: -

DWN R. FABRIS 27FEB2004
CHK -
APVD G. TURCO 27FEB2004
PRODUCT SPEC 108-18056
APPLICATION SPEC 114-18049-1
WEIGHT -

TE Connectivity

NAME: DUOPLUG 2.5 FEMALE CONNECTOR STANDARD VERSION (SELECTIVELY LOADED)

SIZE	CAGE CODE	DRAWING NO	RESTRICTED TO
A1	00779	C-284931	-

CUSTOMER DRAWING | SCALE 2:1 | SHEET 1 OF 1 | REV A21

4805 (3/11)

Mouser Electronics

Authorized Distributor

Click to View Pricing, Inventory, Delivery & Lifecycle Information:

TE Connectivity:

1-284931-1