THIS DRAWING IS UNPUBLISHED. RELEASED FOR PUBLICATION -,- .
© COPYRIGHT 2011 BY TYCO ELECTRONICS CORPORATION. ALL RIGHTS RESERVED.

LOC	DIST
DW	—

REVISIONS

P	LTR	DESCRIPTION	DATE	DWN	APVD
	B4	REVISED (ECO-14-012616), OBSOLETED 3-6.	30DEC2014	LL	SH

LED SCHEMATIC	
POSITION 2	POSITION 1
GREEN	YELLOW
9+ ⊣▷⊢ −10	11+ ⊣▷⊢ −12
FOR 1734320−X	

LED SCHEMATIC	
POSITION 2	POSITION 1
YELLOW	GREEN
9+ ⊣▷⊢ −10	11+ ⊣▷⊢ −12
FOR 1−1734320−X	

LED SCHEMATIC	
POSITION 2	POSITION 1
GREEN	GREEN
9+ ⊣▷⊢ −10	11+ ⊣▷⊢ −12
	YELLOW
FOR 4−1734320−X	

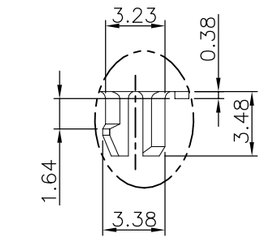

DETAIL B(SCEALE 2:1)

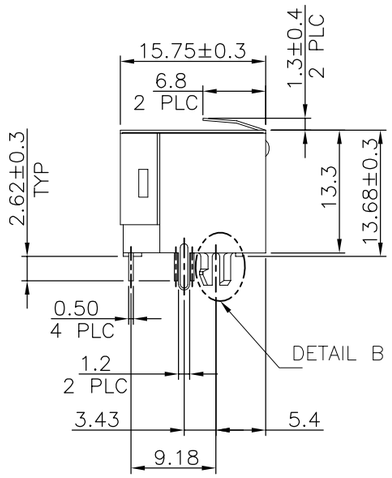

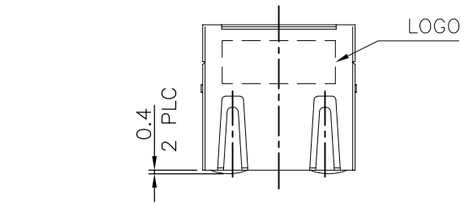

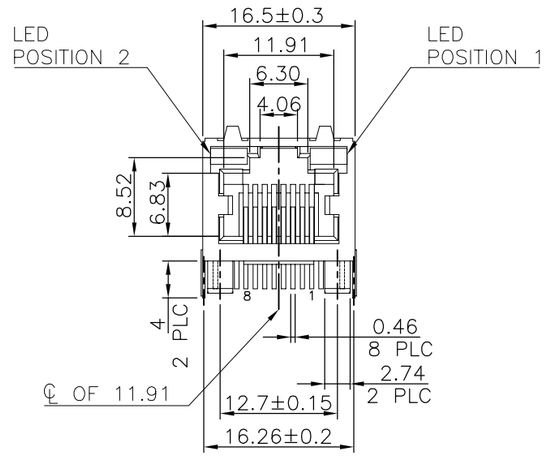

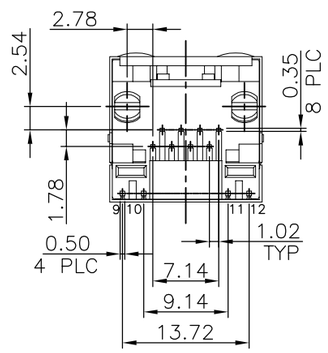

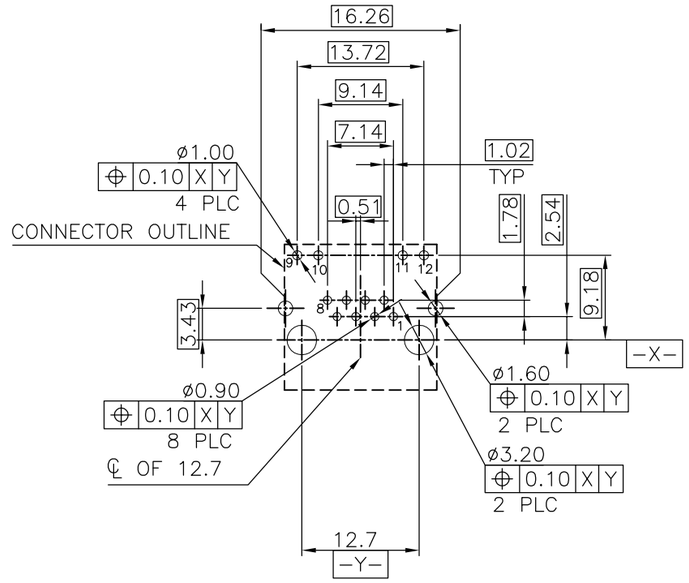

RECOMMENDED PCB LAYOUT
TOLERANCE: ±0.05 (TOP VIEW)

5 OBSOLETE	GREEN	GREEN/ YELLOW	1.27μm [50μ"]	~~4=1734320=4~~
			0.762μm [30μ"]	~~4−1734320−3~~
			0.381μm [15μ"]	~~4=1734320=2~~
OBSOLETE			0.152μm [6μ"]	~~4=1734320=1~~
5 OBSOLETE	YELLOW	GREEN	1.27μm [50μ"]	~~1=1734320=4~~
			0.762μm [30μ"]	~~1=1734320=3~~
			0.381μm [15μ"]	~~1=1734320=2~~
			0.152μm [6μ"]	~~1=1734320=1~~
OBSOLETE	GREEN	YELLOW	1.27μm [50μ"]	~~1734320=4~~
			0.762μm [30μ"]	~~1734320=3~~
5 OBSOLETE			0.381μm [15μ"]	~~1734320=2~~
			0.152μm [6μ"]	1734320−1
	POSITION 2	POSITION 1	MIN. GOLD THICKNESS	PART NUMBER
	INDICATOR COLOR			

NOTE:

1. MATERIAL:
   HOUSING: PA46, WITH 30% GF.
   UL 94V−0, BLACK COLOR.
   CONTACTS: PHOSPHOR BRONZE.
   SHELL: BRASS.
   LED SOLDER TAIL: STEEL.

2. FINISH:
   CONTACTS: (SEE TABLE) GOLD PLATED ON CONTACT AREA,
   GOLD PLATED ON SOLDER TAIL,
   WITH ENTIRE CONTACT UNDERPLATED
   1.27μm [50μ"] MIN. NICKEL.
   SHELL: 0.508μm [20μ"] MIN. NICKEL PLATED.
   LED SOLDER TAIL: 2.159μm [85μ"] MIN. TIN PLATED.

3. RECOMMENDED PCB THICKNESS: 1.6mm.

4. WAVE SOLDER CAPABLE TO 265°C PER TE SPEC 109−202, CONDITION B.

5 OBSOLETE PARTS: OBSOLETE CIS STREAMLINING PER D.RENAUD/D.SINISI

THIS DRAWING IS A CONTROLLED DOCUMENT.

DIMENSIONS: mm

TOLERANCES UNLESS OTHERWISE SPECIFIED:

0 PLC	± −
1 PLC	± 0.3
2 PLC	± 0.2
3 PLC	± 0.15
4 PLC	± −
ANGLES	± 3°

MATERIAL: SEE NOTE

FINISH: SEE NOTE

DWN	B. HSING	09JUN2009
CHK	S. CHIEN	09JUN2009
APVD	W. KODAMA	09JUN2009
PRODUCT SPEC	108−57535	
APPLICATION SPEC	—	
WEIGHT	4.95 GRAMS	

TE Connectivity

NAME: MODULAR JACK CONNECTOR
RJ45, SINGLE PORT, SIDE ENTRY, DIP TYPE

SIZE	CAGE CODE	DRAWING NO	RESTRICTED TO
A3	00779	C−1734320	—

CUSTOMER DRAWING | SCALE — | SHEET 1 OF 6 | REV B4

1470−19 (1/08)

THIS DRAWING IS UNPUBLISHED. RELEASED FOR PUBLICATION -,- .
© COPYRIGHT 2011 BY TYCO ELECTRONICS CORPORATION. ALL RIGHTS RESERVED.

LOC	DIST
DW	—

REVISIONS

P	LTR	DESCRIPTION	DATE	DWN	APVD
		SEE SHEET 1.			

LED SCHEMATIC
GREEN
9+ —▷|— −10

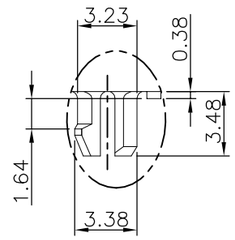

DETAIL B(SCEALE 2:1)

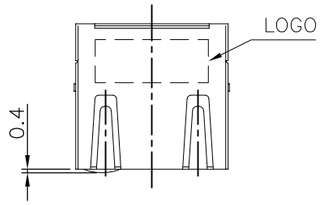

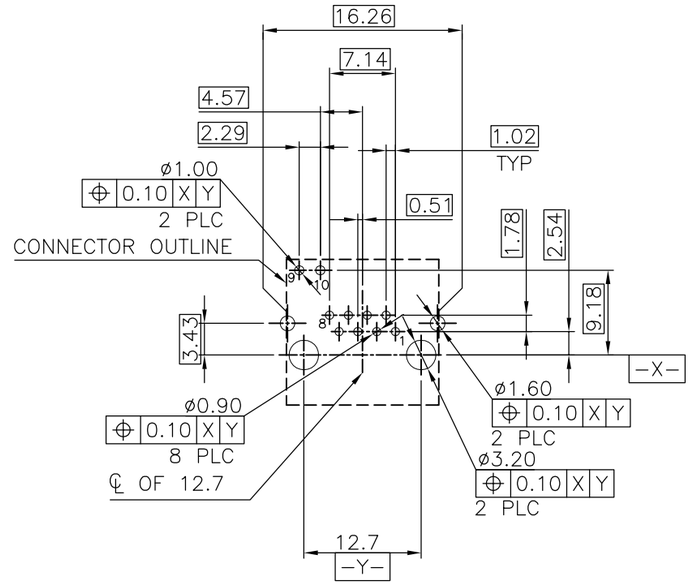

RECOMMENDED PCB LAYOUT
TOLERANCE: ±0.05 (TOP VIEW)

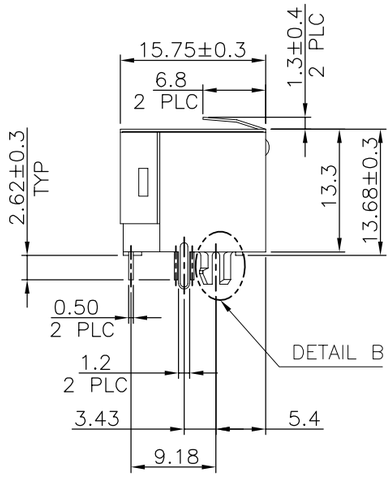

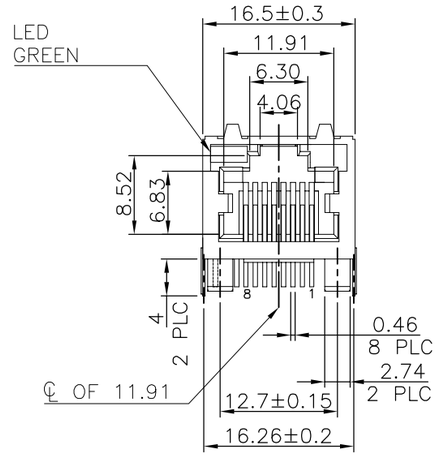

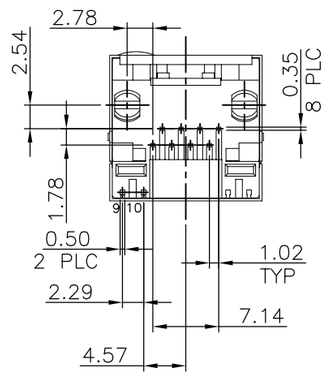

NOTE:

1. MATERIAL:
   HOUSING: PA46, WITH 30% GF.
   UL 94V−0, BLACK COLOR.
   CONTACTS: PHOSPHOR BRONZE.
   SHELL: BRASS.
   LED SOLDER TAIL: STEEL.

2. FINISH:
   CONTACTS: (SEE TABLE) GOLD PLATED ON CONTACT AREA,
   GOLD PLATED ON SOLDER TAIL,
   WITH ENTIRE CONTACT UNDERPLATED
   1.27μm [50μ"] MIN. NICKEL.
   SHELL: 0.508μm [20μ"] MIN. NICKEL PLATED.
   LED SOLDER TAIL: 2.159μm [85μ"] MIN. TIN PLATED.

3. RECOMMENDED PCB THICKNESS: 1.6mm.

4. WAVE SOLDER CAPABLE TO 265°C PER TE SPEC 109−202, CONDITION B.

5 OBSOLETE PARTS: OBSOLETE CIS STREAMLINING PER D.RENAUD/D.SINISI

	MIN. GOLD THICKNESS	PART NUMBER
5 OBSOLETE	1.27μm [50μ"]	~~2-1734320-4~~
	0.762μm [30μ"]	~~2-1734320-3~~
	0.381μm [15μ"]	~~2-1734320-2~~
	0.152μm [6μ"]	~~2-1734320-1~~

THIS DRAWING IS A CONTROLLED DOCUMENT.

DIMENSIONS: mm

TOLERANCES UNLESS OTHERWISE SPECIFIED:

0 PLC	± −
1 PLC	± 0.3
2 PLC	± 0.2
3 PLC	± 0.15
4 PLC	± −
ANGLES	± 3°

MATERIAL: −

FINISH: −

DWN: −
CHK: −
APVD: −
PRODUCT SPEC: −
APPLICATION SPEC: −
WEIGHT: −

TE Connectivity

NAME: MODULAR JACK CONNECTOR
RJ45, SINGLE PORT, SIDE ENTRY, DIP TYPE

SIZE	CAGE CODE	DRAWING NO	RESTRICTED TO
A3	00779	C-1734320	—

CUSTOMER DRAWING | SCALE — | SHEET 2 OF 6 | REV B4

1470−19 (1/08)

THIS DRAWING IS UNPUBLISHED. RELEASED FOR PUBLICATION -,- .
© COPYRIGHT 2011 BY TYCO ELECTRONICS CORPORATION. ALL RIGHTS RESERVED.

LOC	DIST
DW	—

REVISIONS

P	LTR	DESCRIPTION	DATE	DWN	APVD
		SEE SHEET 1.			

LED SCHEMATIC
GREEN
9+ —▷|— −10

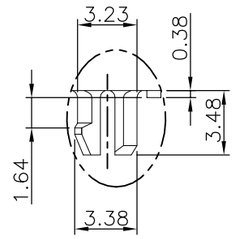

DETAIL B(SCEALE 2:1)

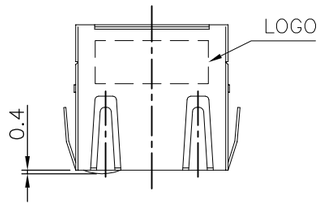

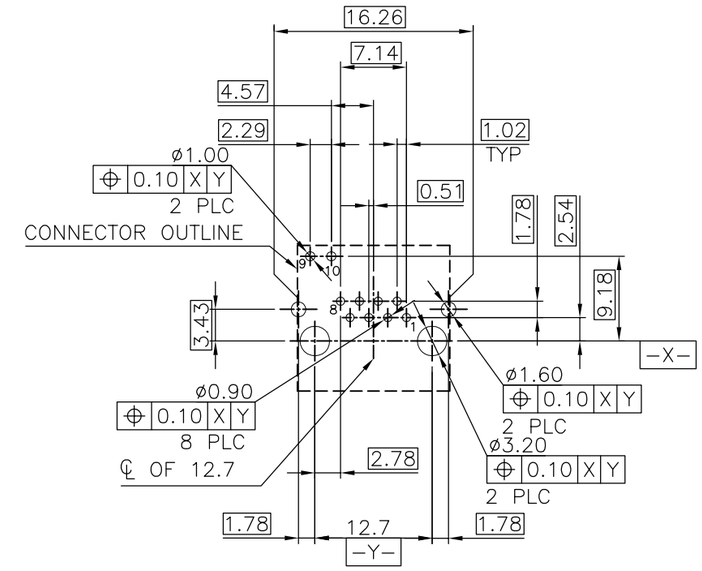

RECOMMENDED PCB LAYOUT
TOLERANCE: ±0.05 (TOP VIEW)

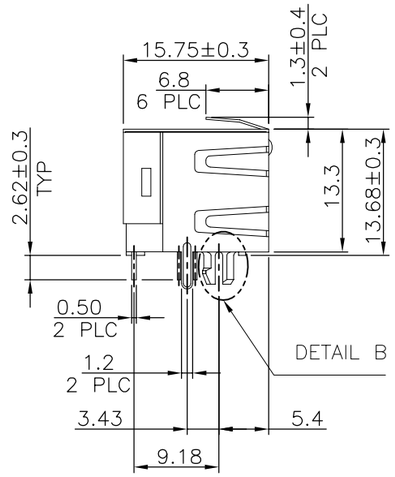

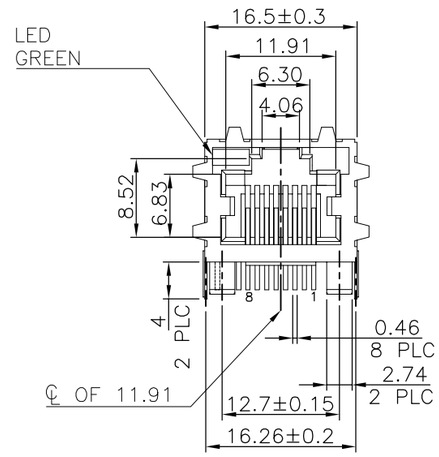

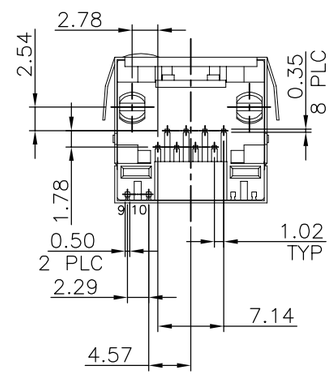

NOTE:

1. MATERIAL:
   HOUSING: PA46, WITH 30% GF.
   UL 94V-0, BLACK COLOR.
   CONTACTS: PHOSPHOR BRONZE.
   SHELL: BRASS.
   LED SOLDER TAIL: STEEL.

2. FINISH:
   CONTACTS: (SEE TABLE) GOLD PLATED ON CONTACT AREA,
   GOLD PLATED ON SOLDER TAIL,
   WITH ENTIRE CONTACT UNDERPLATED
   1.27μm [50μ"] MIN. NICKEL.
   SHELL: 0.508μm [20μ"] MIN. NICKEL PLATED.
   LED SOLDER TAIL: 2.159μm [85μ"] MIN. TIN PLATED.

3. RECOMMENDED PCB THICKNESS: 1.6mm.

4. WAVE SOLDER CAPABLE TO 265°C PER TE SPEC 109-202, CONDITION B.

5. OBSOLETE PARTS: OBSOLETE CIS STREAMLINING PER D.RENAUD/D.SINISI

	MIN. GOLD THICKNESS	PART NUMBER
5 OBSOLETE	1.27μm [50μ"]	~~3-1734320-4~~
	0.762μm [30μ"]	~~3-1734320-3~~
	0.381μm [15μ"]	3-1734320-2
5 OBSOLETE	0.152μm [6μ"]	~~3-1734320-1~~

THIS DRAWING IS A CONTROLLED DOCUMENT.

DIMENSIONS: mm

TOLERANCES UNLESS OTHERWISE SPECIFIED:

0 PLC	± –
1 PLC	± 0.3
2 PLC	± 0.2
3 PLC	± 0.15
4 PLC	± –
ANGLES	± 3°

MATERIAL: –

FINISH: –

DWN –
CHK –
APVD –
PRODUCT SPEC —
APPLICATION SPEC —
WEIGHT —

TE Connectivity

NAME: MODULAR JACK CONNECTOR
RJ45, SINGLE PORT, SIDE ENTRY, DIP TYPE

SIZE	CAGE CODE	DRAWING NO	RESTRICTED TO
A3	00779	C-1734320	—

CUSTOMER DRAWING | SCALE — | SHEET 3 OF 6 | REV B4

1470-19 (1/08)

THIS DRAWING IS UNPUBLISHED. RELEASED FOR PUBLICATION -,- .
© COPYRIGHT 2011 BY TYCO ELECTRONICS CORPORATION. ALL RIGHTS RESERVED.

LOC	DIST
DW	—

REVISIONS

P	LTR	DESCRIPTION	DATE	DWN	APVD
		SEE SHEET 1.			

LED SCHEMATIC	
POSITION 2	POSITION 1
GREEN	YELLOW
9+ ⊣▷⊢ −10	11+ ⊣▷⊢ −12
FOR 3−1734320−5	

LED SCHEMATIC	
POSITION 2	POSITION 1
GREEN	GREEN
9+ ⊣▷⊢ −10	11+ ⊣▷⊢ −12
FOR 3−1734320−6	

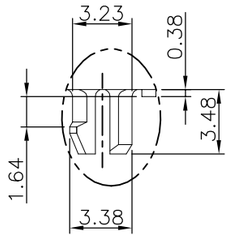

DETAIL B(SCEALE 2:1)

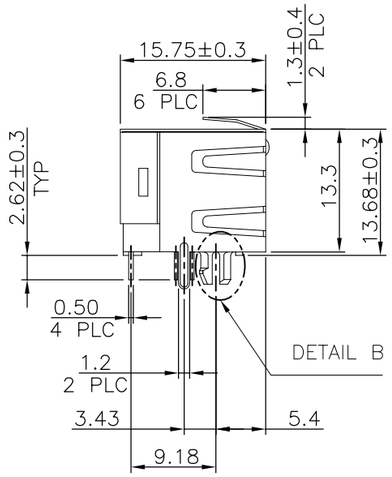

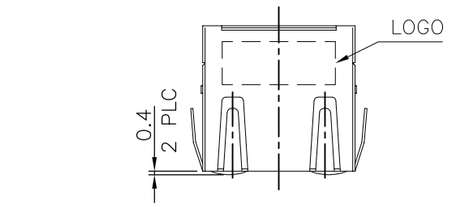

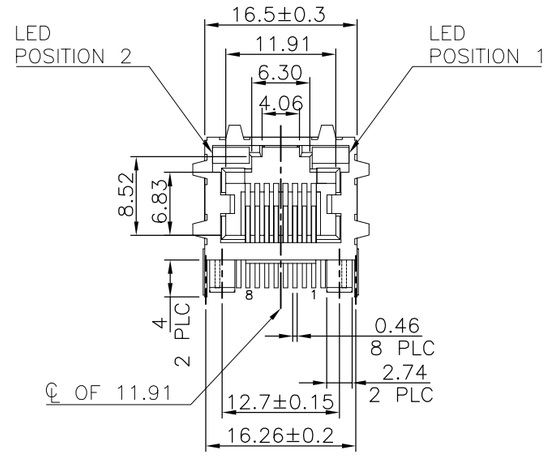

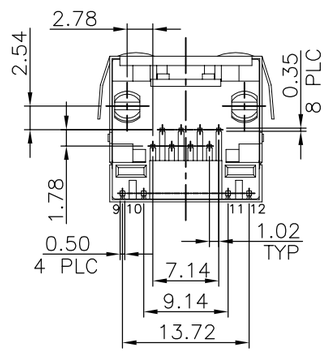

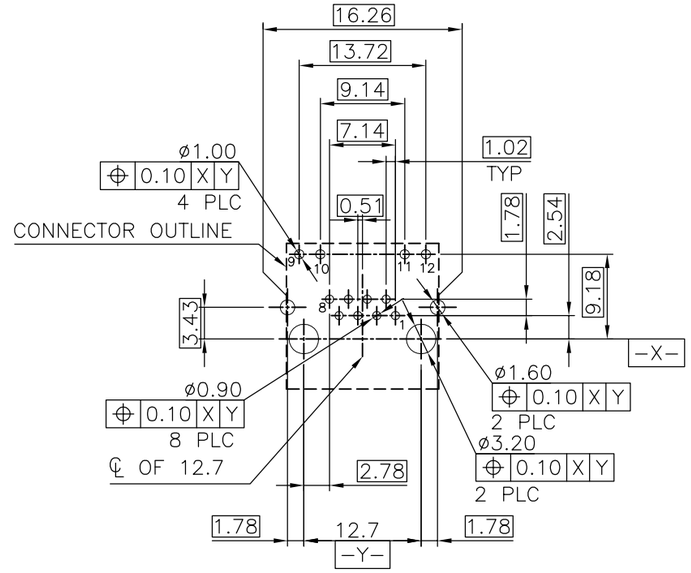

RECOMMENDED PCB LAYOUT
TOLERANCE: ±0.05 (TOP VIEW)

NOTE:

1. MATERIAL:
   HOUSING: PA46, WITH 30% GF.
   UL 94V−0, BLACK COLOR.
   CONTACTS: PHOSPHOR BRONZE.
   SHELL: BRASS.
   LED SOLDER TAIL: STEEL.

2. FINISH:
   CONTACTS: (SEE TABLE) GOLD PLATED ON CONTACT AREA,
   GOLD PLATED ON SOLDER TAIL,
   WITH ENTIRE CONTACT UNDERPLATED
   1.27μm [50μ"] MIN. NICKEL.
   SHELL: 0.508μm [20μ"] MIN. NICKEL PLATED.
   LED SOLDER TAIL: 2.159μm [85μ"] MIN. TIN PLATED.

3. RECOMMENDED PCB THICKNESS: 1.6mm.

4. WAVE SOLDER CAPABLE TO 265°C PER TE SPEC 109−202, CONDITION B.

5. OBSOLETE PARTS: OBSOLETE CIS STREAMLINING PER D.RENAUD/D.SINISI

	INDICATOR COLOR		MIN. GOLD THICKNESS	PART NUMBER
	POSITION 2	POSITION 1		
	GREEN	YELLOW	0.762μm [30μ"]	3−1734320−5
5 OBSOLETE	GREEN	GREEN		~~3−1734320−6~~

THIS DRAWING IS A CONTROLLED DOCUMENT.

DIMENSIONS: mm

TOLERANCES UNLESS OTHERWISE SPECIFIED:

0 PLC	± −
1 PLC	± 0.3
2 PLC	± 0.2
3 PLC	± 0.15
4 PLC	± −
ANGLES	± 3°

MATERIAL: −

FINISH: −

DWN: −
CHK: −
APVD: −
PRODUCT SPEC: −
APPLICATION SPEC: −
WEIGHT: −

TE Connectivity

NAME: MODULAR JACK CONNECTOR
RJ45, SINGLE PORT, SIDE ENTRY, DIP TYPE

SIZE	CAGE CODE	DRAWING NO	RESTRICTED TO
A3	00779	C−1734320	—

CUSTOMER DRAWING | SCALE — | SHEET 4 OF 6 | REV B4

1470−19 (1/08)

THIS DRAWING IS UNPUBLISHED. RELEASED FOR PUBLICATION -,- .
© COPYRIGHT 2011 BY TYCO ELECTRONICS CORPORATION. ALL RIGHTS RESERVED.

LOC	DIST
DW	—

REVISIONS

P	LTR	DESCRIPTION	DATE	DWN	APVD
		SEE SHEET 1.			

LED SCHEMATIC	
POSITION 2	POSITION 1
GREEN	YELLOW
9+ ⊣▷⊢ −10	11+ ⊣▷⊢ −12
FOR 5-1734320-1~4	

LED SCHEMATIC	
POSITION 2	POSITION 1
YELLOW	GREEN
9+ ⊣▷⊢ −10	11+ ⊣▷⊢ −12
FOR 5-1734320-5~8	

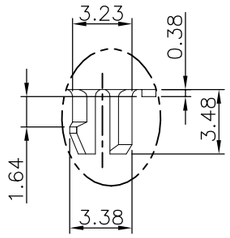

DETAIL B(SCEALE 2:1)

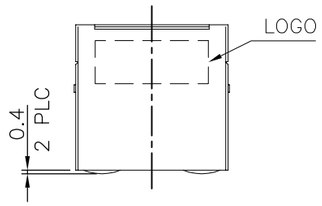

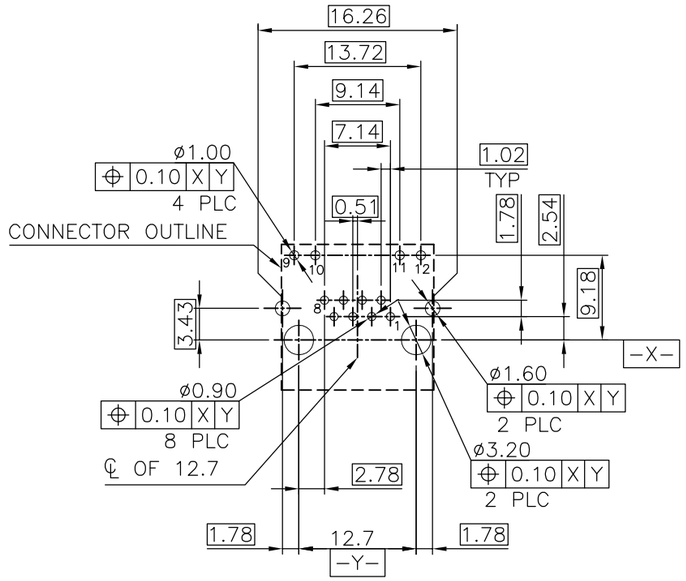

RECOMMENDED PCB LAYOUT
TOLERANCE: ±0.05 (TOP VIEW)

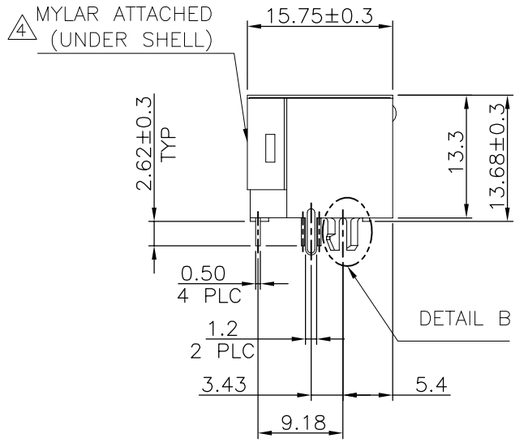

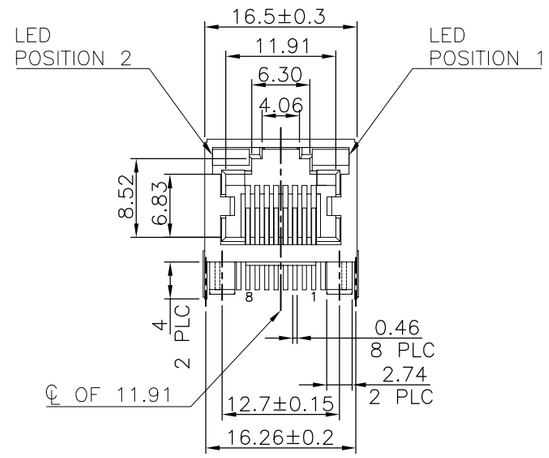

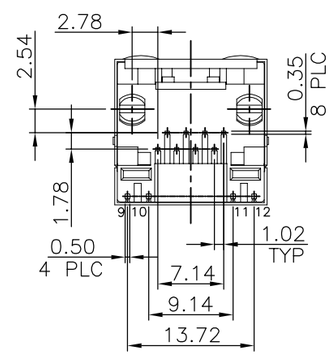

NOTE:

1. MATERIAL:
   HOUSING: PA46, WITH 30% GF.
   UL 94V-0, BLACK COLOR.
   CONTACTS: PHOSPHOR BRONZE.
   SHELL: BRASS.
   LED SOLDER TAIL: STEEL.
   MYLAR: SILICONE POLYMER.

2. FINISH:
   CONTACTS: (SEE TABLE) GOLD PLATED ON CONTACT AREA,
   GOLD PLATED ON SOLDER TAIL,
   WITH ENTIRE CONTACT UNDERPLATED
   1.27μm [50μ"] MIN. NICKEL.
   SHELL: 0.508μm [20μ"] MIN. NICKEL PLATED.
   LED SOLDER TAIL: 2.159μm [85μ"] MIN. TIN PLATED.

3. RECOMMENDED PCB THICKNESS: 1.6mm.

4. MYLAR ATTACHED UNDER SHELL.

5. WAVE SOLDER CAPABLE TO 265°C PER TE SPEC 109-202, CONDITION B.

	POSITION 2 INDICATOR COLOR	POSITION 1 INDICATOR COLOR	MIN. GOLD THICKNESS	PART NUMBER
OBSOLETE	YELLOW	GREEN	1.27μm [50μ"]	~~5-1734320-8~~
			0.762μm [30μ"]	~~5-1734320-7~~
			0.381μm [15μ"]	~~5-1734320-6~~
			0.152μm [6μ"]	~~5-1734320-5~~
	GREEN	YELLOW	1.27μm [50μ"]	~~5-1734320-4~~
			0.762μm [30μ"]	4 5-1734320-3
OBSOLETE			0.381μm [15μ"]	~~5-1734320-2~~
			0.152μm [6μ"]	~~5-1734320-1~~

THIS DRAWING IS A CONTROLLED DOCUMENT.

DIMENSIONS: mm

TOLERANCES UNLESS OTHERWISE SPECIFIED:

0 PLC	± –
1 PLC	± 0.3
2 PLC	± 0.2
3 PLC	± 0.15
4 PLC	± –
ANGLES	± 3°

MATERIAL: –

FINISH: –

DWN –
CHK –
APVD –
PRODUCT SPEC –
APPLICATION SPEC –
WEIGHT –

TE Connectivity

NAME: MODULAR JACK CONNECTOR
RJ45, SINGLE PORT, SIDE ENTRY, DIP TYPE

SIZE	CAGE CODE	DRAWING NO	RESTRICTED TO
A3	00779	C-1734320	–

CUSTOMER DRAWING | SCALE – | SHEET 5 OF 6 | REV B4

THIS DRAWING IS UNPUBLISHED. RELEASED FOR PUBLICATION -,- .
© COPYRIGHT 2011 BY TYCO ELECTRONICS CORPORATION. ALL RIGHTS RESERVED.

LOC	DIST
DW	—

REVISIONS

P	LTR	DESCRIPTION	DATE	DWN	APVD
		SEE SHEET 1.			

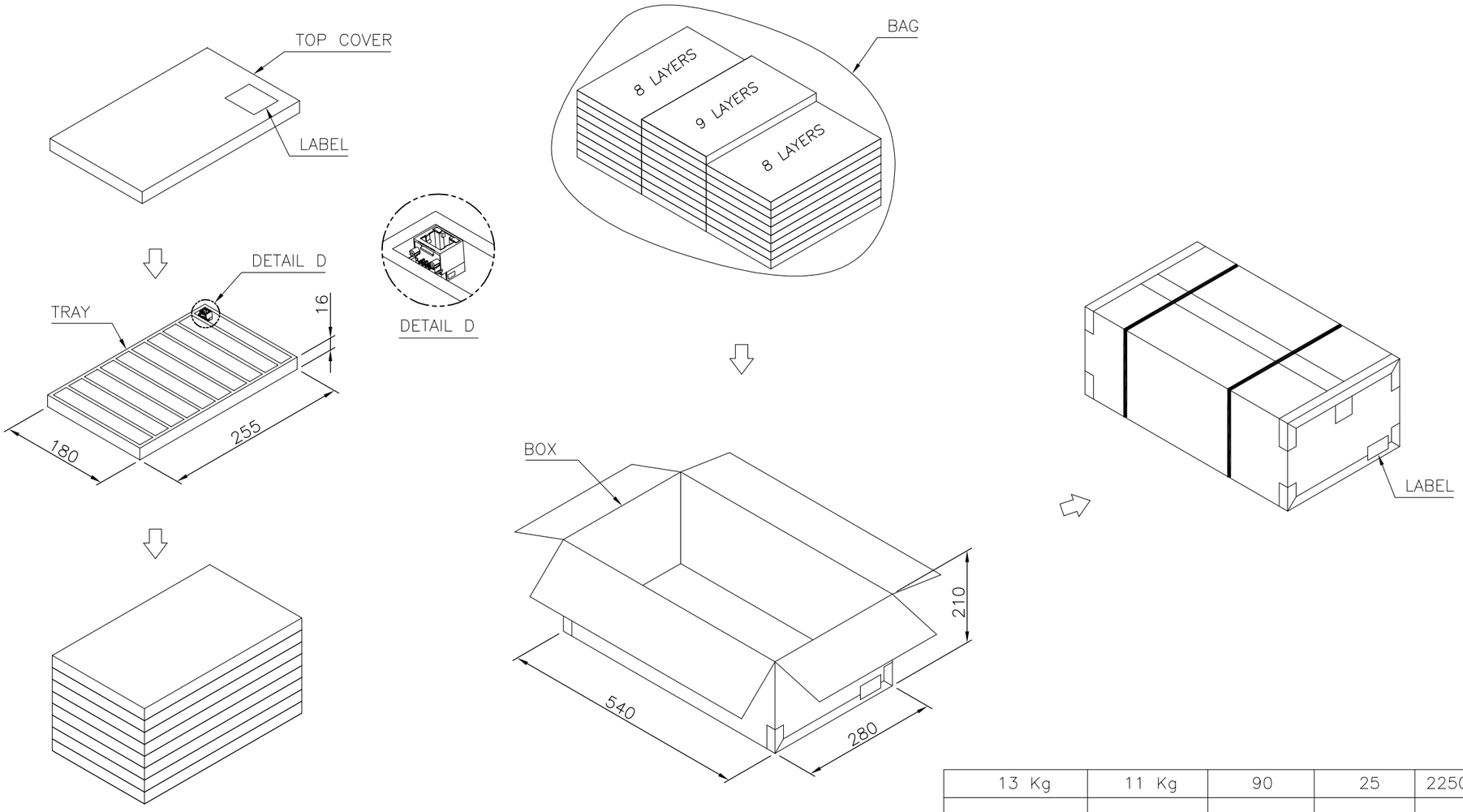

13 Kg	11 Kg	90	25	2250 PCS	3-1734320-X
14.4 Kg	12.4 Kg	100	25	2500 PCS	5-1734320-X 4-1734320-X 2-1734320-X 1-1734320-X 1734320-X
GROSS WEIGHT (Ref.)	NET WEIGHT (Ref.)	PCS/TRAY	TRAYS /BOX	QUANTITY	PART NUMBER

THIS DRAWING IS A CONTROLLED DOCUMENT.

DIMENSIONS: mm

TOLERANCES UNLESS OTHERWISE SPECIFIED:

0 PLC	± –
1 PLC	± 0.3
2 PLC	± 0.2
3 PLC	± 0.15
4 PLC	± –
ANGLES	± 3'

MATERIAL –

FINISH –

DWN –
CHK –
APVD –
PRODUCT SPEC –
APPLICATION SPEC –
WEIGHT –

TE Connectivity

NAME
MODULAR JACK CONNECTOR
RJ45, SINGLE PORT, SIDE ENTRY, DIP TYPE

SIZE	CAGE CODE	DRAWING NO	RESTRICTED TO
A3	00779	C-1734320	—

CUSTOMER DRAWING | SCALE — | SHEET 6 OF 6 | REV B4

1470-19 (1/08)

Mouser Electronics

Authorized Distributor

Click to View Pricing, Inventory, Delivery & Lifecycle Information:

TE Connectivity:

3-1734320-5