Panel Thickness
Screw L=5.0 For Panel Thickness Under 1.2mm
Screw L=6.0 For Panel Thickness Between 1.2-2.0mm

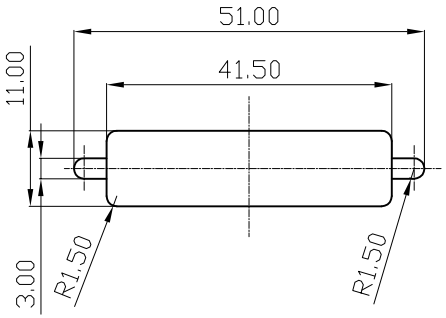

Recommended Panel Cut-Out

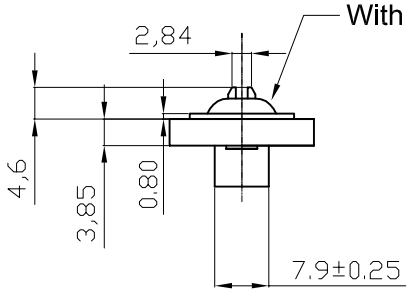

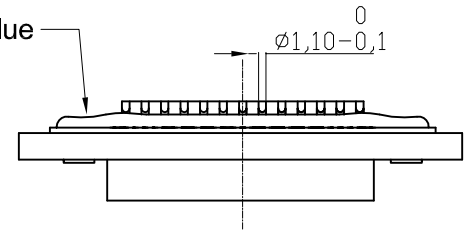

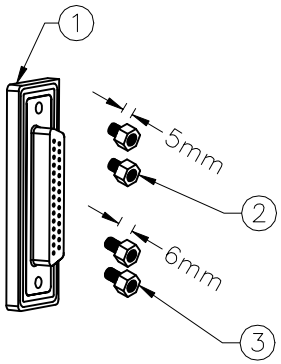

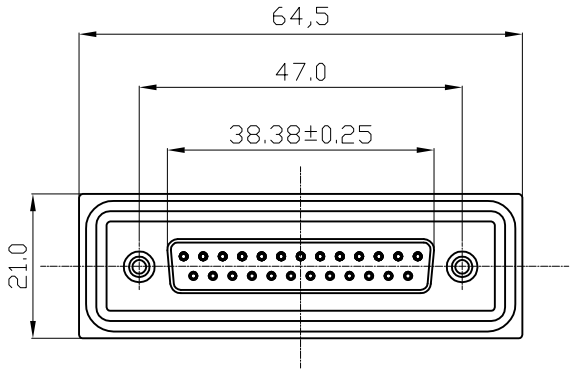

NOTES:

MATERIAL
1.Insulator Material:Black,NYLON+G/F
2.Contact Material : Copper Alloy
3.Plating : Gold Plating
4.Waterproof Rate: IP67
5.Do Mating Test After Glued
6.Applicable Wire Range:22AWG-26AWG

RoHS compliant
Unit: mm

Scale	Free
TOLERANCE	
X.X	±0.25
X.XX	±0.10
X.XXX	±0.05
DIM	TOL
ANGLE	±1°
X.X°	±X°
Angle	TOL

Id.	Modification	Date	Name
②	Cancel LOGO	24.01.2018	Tom
①	Drawn	24.12.2008	JACK

	Date	Name
Drawn	24.12.2008	JACK
Approved	24.01.2018	Amy

ASSMANN WSW components

Customer-No.

ASSMANN WSW-No.
A-DF 25 LL-WP

Drawing-No.
ASS 3260 CO

rev02

Replace

Sheet