PART NAME	UTILIBOX (STYLE E)	PART No.	CU-793 & CUR-793

MATERIAL:
ABS THERMOPLASTIC
(FLAMMABILITY RATING OF 94V-0 AT 0.070" THICKNESS AND CONTINUOUS USE TEMPERATURE OF 70° C.)

FINISH:
BODY (NO SUFFIX) - OUTSIDE SURFACES ARE TEXTURED FINISH WITH TEXTURED INSERT AREA.
BODY (SUFFIX -R) - OUTSIDE SURFACES ARE TEXTURED FINISH WITH SMOOTH RECESSED INSERT AREA.
COVER - SURFACES ARE SMOOTH.

COLOR: BLACK

COVER REDUCES INSIDE HEIGHT BY 0.085.

LENGTH AND WIDTH DIMENSIONS ARE TAKEN FROM CLOSED END OF THE BOX. DIMENSIONS INCREASE SLIGHTLY AT OPEN END DUE TO TAPER.

FOUR (4) #4 x 0.500" LG. SELF THREADING SCREWS WITH HI/LOW THREADS ARE SUPPLIED FOR MOUNTING COVER.

NOTE: ALL DIMENSIONS HAVE ±0.010 TOLERANCE UNLESS OTHERWISE SPECIFIED.

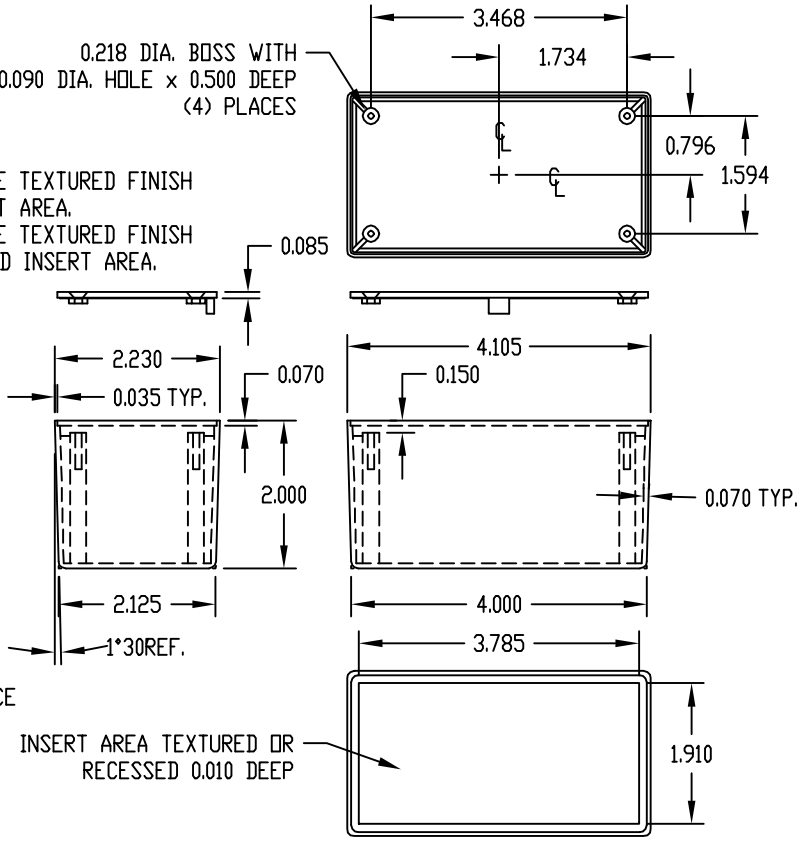

PART NAME	UTILIBOX (STYLE E)	PART No.	CU-793-MB & CUR-793-MB

MATERIAL:
ABS THERMOPLASTIC
(FLAMMABILITY RATING OF 94V-0 AT 0.070" THICKNESS AND CONTINUOUS USE TEMPERATURE OF 70° C.)

FINISH:
BODY (SUFFIX -MB) - OUTSIDE SURFACES ARE TEXTURED FINISH WITH TEXTURED INSERT AREA.
BODY (SUFFIX -RMB) - OUTSIDE SURFACES ARE TEXTURED FINISH WITH SMOOTH RECESSED INSERT AREA.
COVER - SURFACES ARE SMOOTH.

COLOR: BLACK

COVER REDUCES INSIDE HEIGHT BY 0.085.

LENGTH AND WIDTH DIMENSIONS ARE TAKEN FROM CLOSED END OF THE BOX. DIMENSIONS INCREASE SLIGHTLY AT OPEN END DUE TO TAPER.

FOUR (4) #4 x 0.500" LG. SELF THREADING SCREWS WITH HI/LOW THREADS ARE SUPPLIED FOR MOUNTING COVER.

NOTE: ALL DIMENSIONS HAVE ±0.010 TOLERANCE UNLESS OTHERWISE SPECIFIED.

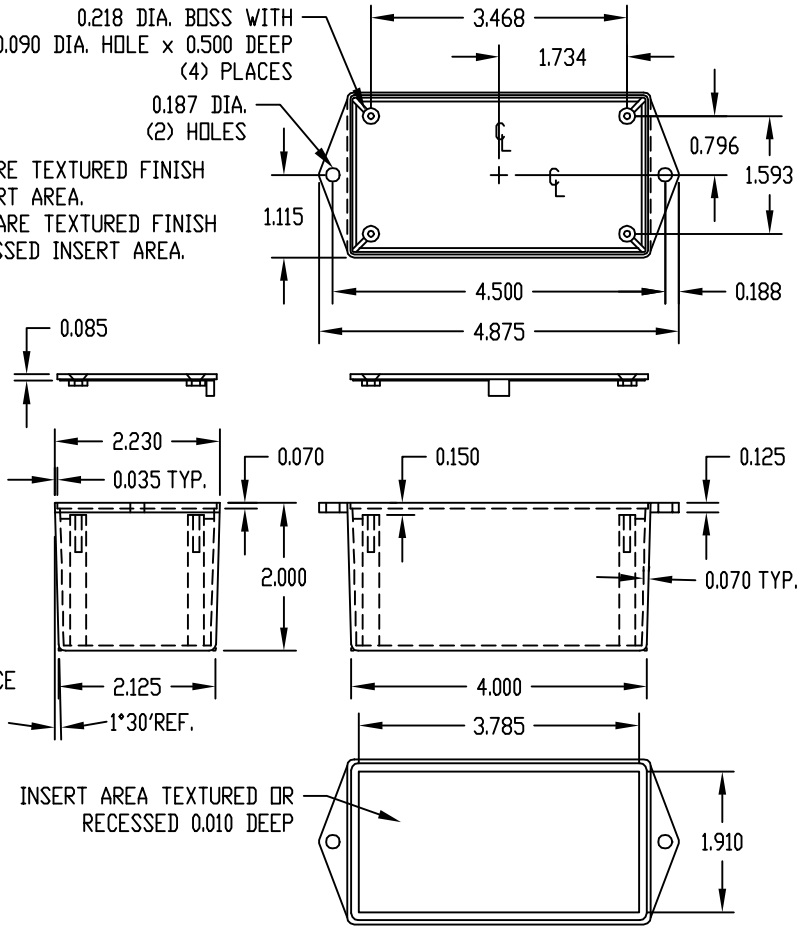

Mouser Electronics

Authorized Distributor

Click to View Pricing, Inventory, Delivery & Lifecycle Information:

Bud Industries:

CUR-793 CUR-793-MB CU-793-MB CU-793