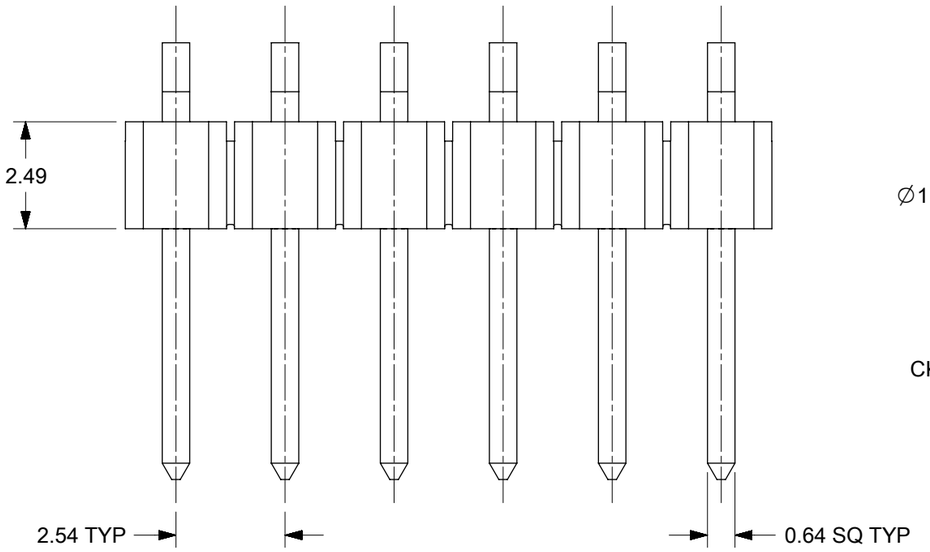

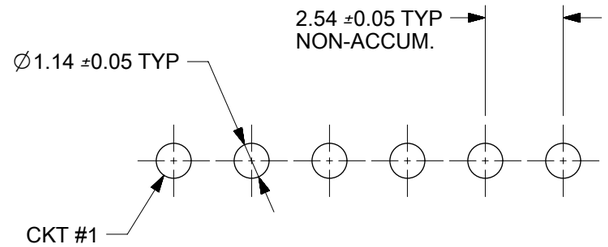

RECOMMENDED P.C.B. LAYOUT

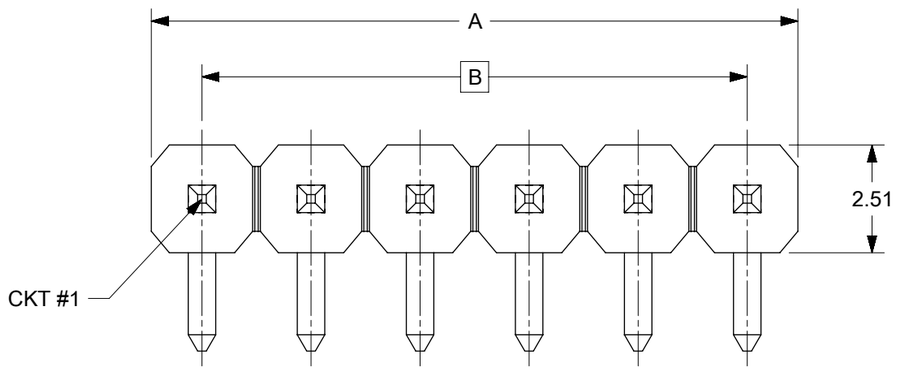

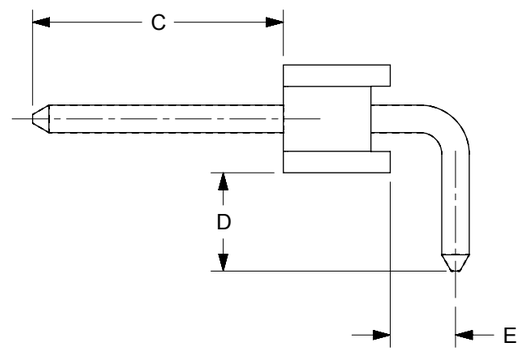

NOTES:
1. MATERIAL:
   HOUSING: HIGH TEMP. THERMOPLASTIC UL94V-0,
   COLOR: BLACK
   TERMINAL: COPPER ALLOY
2. PLATING TYPE:
   (1) : GOLD FLASH OVER
   50 MICRO INCHES MIN. NICKEL OVERALL.

   (2) : 1 MICRO INCHES MIN. GOLD PLATE ON CONTACT AND
   75 MICRO INCHES MIN. TIN ON SOLDERTAIL OVER
   50 MICRO INCHES MIN. NICKEL OVERALL.

   (3) : 10 MICRO INCHES MIN. GOLD PLATE ON CONTACT AND
   75 MICRO INCHES MIN. TIN ON SOLDERTAIL OVER
   50 MICRO INCHES MIN. NICKEL OVERALL.

   (4) : 15 MICRO INCHES MIN. GOLD PLATE ON CONTACT AND
   75 MICRO INCHES MIN. TIN ON SOLDERTAIL OVER
   50 MICRO INCHES MIN. NICKEL OVERALL.

   (5) : 30 MICRO INCHES MIN. GOLD PLATE ON CONTACT AND
   75 MICRO INCHES MIN. TIN ON SOLDERTAIL OVER
   50 MICRO INCHES MIN. NICKEL OVERALL.

   (6) : 100 MICRO INCHES MIN. TIN IN SELECTED AREA OVER
   50 MICRO INCHES MIN. NICKEL OVERALL.
3. PRODUCT SPECIFICATION: PS-87920-019
4. PACKAGING SPECIFICATION: PK-89990-489 (TRAY)
   PK-89990-516 (TUBE)
5. PIN PUSHOUT FORCE: 1KG MIN IN EITHER DIRECTION
6. THE ABOVE 6 CKT IS FOR ILLUSTRATION PURPOSE ONLY.

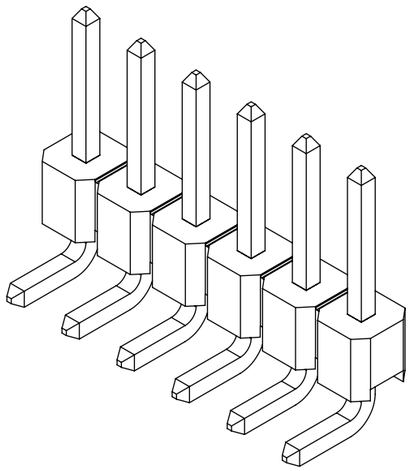

THIS DRAWING CONTAINS INFORMATION THAT IS PROPRIETARY TO MOLEX ELECTRONIC TECHNOLOGIES, LLC AND SHOULD NOT BE USED WITHOUT WRITTEN PERMISSION

CKT1&2 NO TUBE OPT		
EC NO: 600923	DRWN: FCSOO	2018/07/03
CHK'D: ISHWARG		2018/08/14
APPR: ISHWARG		2018/08/14

GENERAL TOLERANCES (UNLESS SPECIFIED)

	MM	INCH
4 PLACES	±	±
3 PLACES	±	±
2 PLACES	± 0.2	±
1 PLACES	±	±
0 PLACES	±	±

ANGULAR TOL ± 3.0

DRAFT WHERE APPLICABLE MUST REMAIN WITHIN DIMENSIONS

A4 REV

DIMENSION UNITS	MM
SCALE	NTS
DRWN BY	YLQIAO
DATE	2005/01/24
CHK'D BY	PTLIM
DATE	2005/02/01
APPR BY	SCLOW
DATE	2005/02/01
DRAWING SIZE	A3
THIRD ANGLE PROJECTION	

molex®

SALES DRAWING
SINGLE ROW SINGLE WAFER 2.54MM PITCH, R/A

PRODUCT CUSTOMER DRAWING

SERIES	MATERIAL NUMBER	CUSTOMER
87897	SEE TABLE	GENERAL MARKET

DOCUMENT NUMBER	DOC TYPE	DOC PART	SHEET NUMBER
SD-87897-010	PSD	001	1 OF 15

RELEASE STATUS	P1	RELEASE DATE	2018/08/14 03:47:53

FORMAT: Met-lega-master-lb-prod-A3
REVISION: C
DATE: 2017/02/06

PACKAGING OPTION PART NO.						CKT SIZE	VOID POSITION	PLATING TYPE	DIMENSION				
TRAY WITHOUT CAP	TRAY WITH CAP	TUBE WITHOUT CAP	TUBE WITH CAP	TAPE & REEL WITHOUT CAP	TAPE & REEL WITH CAP				A	B	C	D	E
87897-0101	------	N/A △1 (A4)	------	------	------	1	------	1	2.54	----	5.84	2.29	1.52
87897-0102	------	N/A △1 (A4)	------	------	------	1	------	2	2.54	----	5.84	2.29	1.52
87897-0103	------	N/A △1 (A4)	------	------	------	1	------	3	2.54	----	5.84	2.29	1.52
87897-0104	------	N/A △1 (A4)	------	------	------	1	------	4	2.54	----	5.84	2.29	1.52
87897-0105	------	N/A △1 (A4)	------	------	------	1	------	5	2.54	----	5.84	2.29	1.52
87897-0106	------	N/A △1 (A4)	------	------	------	1	------	6	2.54	----	5.84	2.29	1.52
87897-0201	------	N/A △1 (A4)	------	------	------	2	------	1	5.08	2.54	5.84	2.29	1.52
87897-0202	------	N/A △1 (A4)	------	------	------	2	------	2	5.08	2.54	5.84	2.29	1.52
87897-0203	------	N/A △1 (A4)	------	------	------	2	------	3	5.08	2.54	5.84	2.29	1.52
87897-0204	------	N/A △1 (A4)	------	------	------	2	------	4	5.08	2.54	5.84	2.29	1.52
87897-0205	------	N/A △1 (A4)	------	------	------	2	------	5	5.08	2.54	5.84	2.29	1.52
87897-0206	------	N/A △1 (A4)	------	------	------	2	------	6	5.08	2.54	5.84	2.29	1.52
87897-0301	------	87897-0321	------	------	------	3	------	1	7.62	5.08	5.84	2.29	1.52
87897-0302	------	87897-0322	------	------	------	3	------	2	7.62	5.08	5.84	2.29	1.52
87897-0303	------	87897-0323	------	------	------	3	------	3	7.62	5.08	5.84	2.29	1.52
87897-0304	------	87897-0324	------	------	------	3	------	4	7.62	5.08	5.84	2.29	1.52
87897-0305	------	87897-0325	------	------	------	3	------	5	7.62	5.08	5.84	2.29	1.52
87897-0306	------	87897-0326	------	------	------	3	------	6	7.62	5.08	5.84	2.29	1.52

(A4) △1 TUBE OPTION IS NOT RECOMMENDED FOR CKT 1 AND 2

THIS DRAWING CONTAINS INFORMATION THAT IS PROPRIETARY TO MOLEX ELECTRONIC TECHNOLOGIES, LLC AND SHOULD NOT BE USED WITHOUT WRITTEN PERMISSION

CKT1&2 NO TUBE OPT

EC NO: 600923 2018/07/03
DRWN: FCSOO 2018/08/14
CHK'D: ISHWARG 2018/08/14
APPR: ISHWARG

A4 REV

GENERAL TOLERANCES (UNLESS SPECIFIED)

	MM	INCH
4 PLACES	±	±
3 PLACES	±	±
2 PLACES	± 0.2	±
1 PLACES	±	±
0 PLACES	±	±

ANGULAR TOL ± 3.0

DRAFT WHERE APPLICABLE MUST REMAIN WITHIN DIMENSIONS

DIMENSION UNITS: MM
SCALE: NTS
DRWN BY: YLQIAO DATE: 2005/01/24
CHK'D BY: PTLIM DATE: 2005/02/01
APPR BY: SCLOW DATE: 2005/02/01
DRAWING SIZE: A3
THIRD ANGLE PROJECTION

molex®

SALES DRAWING
SINGLE ROW SINGLE WAFER 2.54MM PITCH, R/A

PRODUCT CUSTOMER DRAWING

SERIES	MATERIAL NUMBER	CUSTOMER
87897	SEE TABLE	GENERAL MARKET

DOCUMENT NUMBER	DOC TYPE	DOC PART	SHEET NUMBER
SD-87897-010	PSD	001	2 OF 15

RELEASE STATUS	P1	RELEASE DATE	2018/08/14 03:47:53

FORMAT: Met-lega-master-tb-prod-A3
REVISION: C
DATE: 2017/02/06

PACKAGING OPTION PART NO.						CKT SIZE	VOID POSITION	PLATING TYPE	DIMENSION				
TRAY WITHOUT CAP	TRAY WITH CAP	TUBE WITHOUT CAP	TUBE WITH CAP	TAPE & REEL WITHOUT CAP	TAPE & REEL WITH CAP				A	B	C	D	E
87897-0401	------	87897-0421	------	------	------	4	------	1	10.16	7.62	5.84	2.29	1.52
87897-0402	------	87897-0422	------	------	------	4	------	2	10.16	7.62	5.84	2.29	1.52
87897-0403	------	87897-0423	------	------	------	4	------	3	10.16	7.62	5.84	2.29	1.52
87897-0404	------	87897-0424	------	------	------	4	------	4	10.16	7.62	5.84	2.29	1.52
87897-0405	------	87897-0425	------	------	------	4	------	5	10.16	7.62	5.84	2.29	1.52
87897-0406	------	87897-0426	------	------	------	4	------	6	10.16	7.62	5.84	2.29	1.52
87897-0501	------	87897-0521	------	------	------	5	------	1	12.70	10.16	5.84	2.29	1.52
87897-0502	------	87897-0522	------	------	------	5	------	2	12.70	10.16	5.84	2.29	1.52
87897-0503	------	87897-0523	------	------	------	5	------	3	12.70	10.16	5.84	2.29	1.52
87897-0504	------	87897-0524	------	------	------	5	------	4	12.70	10.16	5.84	2.29	1.52
87897-0505	------	87897-0525	------	------	------	5	------	5	12.70	10.16	5.84	2.29	1.52
87897-0506	------	87897-0526	------	------	------	5	------	6	12.70	10.16	5.84	2.29	1.52
87897-0601	------	87897-0621	------	------	------	6	------	1	15.24	12.70	5.84	2.29	1.52
87897-0602	------	87897-0622	------	------	------	6	------	2	15.24	12.70	5.84	2.29	1.52
87897-0603	------	87897-0623	------	------	------	6	------	3	15.24	12.70	5.84	2.29	1.52
87897-0604	------	87897-0624	------	------	------	6	------	4	15.24	12.70	5.84	2.29	1.52
87897-0605	------	87897-0625	------	------	------	6	------	5	15.24	12.70	5.84	2.29	1.52
87897-0606	------	87897-0626	------	------	------	6	------	6	15.24	12.70	5.84	2.29	1.52

THIS DRAWING CONTAINS INFORMATION THAT IS PROPRIETARY TO MOLEX ELECTRONIC TECHNOLOGIES, LLC AND SHOULD NOT BE USED WITHOUT WRITTEN PERMISSION

CKT1&2 NO TUBE OPT

EC NO: 600923 2018/07/03
DRWN: FCSOO 2018/08/14
CHK'D: ISHWARG 2018/08/14
APPR: ISHWARG

A4 REV

GENERAL TOLERANCES (UNLESS SPECIFIED)

	MM	INCH
4 PLACES	±	±
3 PLACES	±	±
2 PLACES	± 0.2	±
1 PLACES	±	±
0 PLACES	±	±

ANGULAR TOL ± 3.0

DRAFT WHERE APPLICABLE MUST REMAIN WITHIN DIMENSIONS

DIMENSION UNITS: MM
SCALE: NTS
DRWN BY: YLQIAO DATE: 2005/01/24
CHK'D BY: PTLIM DATE: 2005/02/01
APPR BY: SCLOW DATE: 2005/02/01
DRAWING SIZE: A3
THIRD ANGLE PROJECTION

molex®

SALES DRAWING
SINGLE ROW SINGLE WAFER 2.54MM PITCH, R/A

PRODUCT CUSTOMER DRAWING

SERIES	MATERIAL NUMBER	CUSTOMER
87897	SEE TABLE	GENERAL MARKET

DOCUMENT NUMBER	DOC TYPE	DOC PART	SHEET NUMBER
SD-87897-010	PSD	001	3 OF 15

RELEASE STATUS	P1	RELEASE DATE	2018/08/14 03:47:53

FORMAT: Met-lega-master-tb-prod-A3
REVISION: C
DATE: 2017/02/06

PACKAGING OPTION PART NO.						CKT SIZE	VOID POSITION	PLATING TYPE	DIMENSION				
TRAY WITHOUT CAP	TRAY WITH CAP	TUBE WITHOUT CAP	TUBE WITH CAP	TAPE & REEL WITHOUT CAP	TAPE & REEL WITH CAP				A	B	C	D	E
87897-0701	------	87897-0721	------	------	------	7	------	1	17.78	15.24	5.84	2.29	1.52
87897-0702	------	87897-0722	------	------	------	7	------	2	17.78	15.24	5.84	2.29	1.52
87897-0703	------	87897-0723	------	------	------	7	------	3	17.78	15.24	5.84	2.29	1.52
87897-0704	------	87897-0724	------	------	------	7	------	4	17.78	15.24	5.84	2.29	1.52
87897-0705	------	87897-0725	------	------	------	7	------	5	17.78	15.24	5.84	2.29	1.52
87897-0706	------	87897-0726	------	------	------	7	------	6	17.78	15.24	5.84	2.29	1.52
87897-0801	------	87897-0821	------	------	------	8	------	1	20.32	17.78	5.84	2.29	1.52
87897-0802	------	87897-0822	------	------	------	8	------	2	20.32	17.78	5.84	2.29	1.52
87897-0803	------	87897-0823	------	------	------	8	------	3	20.32	17.78	5.84	2.29	1.52
87897-0804	------	87897-0824	------	------	------	8	------	4	20.32	17.78	5.84	2.29	1.52
87897-0805	------	87897-0825	------	------	------	8	------	5	20.32	17.78	5.84	2.29	1.52
87897-0806	------	87897-0826	------	------	------	8	------	6	20.32	17.78	5.84	2.29	1.52
87897-0901	------	87897-0921	------	------	------	9	------	1	22.86	20.32	5.84	2.29	1.52
87897-0902	------	87897-0922	------	------	------	9	------	2	22.86	20.32	5.84	2.29	1.52
87897-0903	------	87897-0923	------	------	------	9	------	3	22.86	20.32	5.84	2.29	1.52
87897-0904	------	87897-0924	------	------	------	9	------	4	22.86	20.32	5.84	2.29	1.52
87897-0905	------	87897-0925	------	------	------	9	------	5	22.86	20.32	5.84	2.29	1.52
87897-0906	------	87897-0926	------	------	------	9	------	6	22.86	20.32	5.84	2.29	1.52

THIS DRAWING CONTAINS INFORMATION THAT IS PROPRIETARY TO MOLEX ELECTRONIC TECHNOLOGIES, LLC AND SHOULD NOT BE USED WITHOUT WRITTEN PERMISSION

CKT1&2 NO TUBE OPT

EC NO: 600923 2018/07/03
DRWN: FCSOO 2018/08/14
CHK'D: ISHWARG 2018/08/14
APPR: ISHWARG

A4 REV

GENERAL TOLERANCES (UNLESS SPECIFIED)

	MM	INCH
4 PLACES	±	±
3 PLACES	±	±
2 PLACES	± 0.2	±
1 PLACES	±	±
0 PLACES	±	±

ANGULAR TOL ± 3.0

DRAFT WHERE APPLICABLE MUST REMAIN WITHIN DIMENSIONS

DIMENSION UNITS: MM
SCALE: NTS
DRWN BY: YLQIAO DATE: 2005/01/24
CHK'D BY: PTLIM DATE: 2005/02/01
APPR BY: SCLOW DATE: 2005/02/01
DRAWING SIZE: A3
THIRD ANGLE PROJECTION

molex®

SALES DRAWING
SINGLE ROW SINGLE WAFER 2.54MM PITCH, R/A

PRODUCT CUSTOMER DRAWING

SERIES	MATERIAL NUMBER	CUSTOMER
87897	SEE TABLE	GENERAL MARKET

DOCUMENT NUMBER	DOC TYPE	DOC PART	SHEET NUMBER
SD-87897-010	PSD	001	4 OF 15

RELEASE STATUS	P1	RELEASE DATE	2018/08/14 03:47:53

FORMAT: Met-lega-master-tb-prod-A3
REVISION: C
DATE: 2017/02/06

PACKAGING OPTION PART NO.						CKT SIZE	VOID POSITION	PLATING TYPE	DIMENSION				
TRAY WITHOUT CAP	TRAY WITH CAP	TUBE WITHOUT CAP	TUBE WITH CAP	TAPE & REEL WITHOUT CAP	TAPE & REEL WITH CAP				A	B	C	D	E
87897-1001	------	87897-1021	------	------	------	10	------	1	25.40	22.86	5.84	2.29	1.52
87897-1002	------	87897-1022	------	------	------	10	------	2	25.40	22.86	5.84	2.29	1.52
87897-1003	------	87897-1023	------	------	------	10	------	3	25.40	22.86	5.84	2.29	1.52
87897-1004	------	87897-1024	------	------	------	10	------	4	25.40	22.86	5.84	2.29	1.52
87897-1005	------	87897-1025	------	------	------	10	------	5	25.40	22.86	5.84	2.29	1.52
87897-1006	------	87897-1026	------	------	------	10	------	6	25.40	22.86	5.84	2.29	1.52
87897-1101	------	87897-1121	------	------	------	11	------	1	27.94	25.40	5.84	2.29	1.52
87897-1102	------	87897-1122	------	------	------	11	------	2	27.94	25.40	5.84	2.29	1.52
87897-1103	------	87897-1123	------	------	------	11	------	3	27.94	25.40	5.84	2.29	1.52
87897-1104	------	87897-1124	------	------	------	11	------	4	27.94	25.40	5.84	2.29	1.52
87897-1105	------	87897-1125	------	------	------	11	------	5	27.94	25.40	5.84	2.29	1.52
87897-1106	------	87897-1126	------	------	------	11	------	6	27.94	25.40	5.84	2.29	1.52
87897-1101	------	87897-1221	------	------	------	12	------	1	30.48	27.94	5.84	2.29	1.52
87897-1102	------	87897-1222	------	------	------	12	------	2	30.48	27.94	5.84	2.29	1.52
87897-1103	------	87897-1223	------	------	------	12	------	3	30.48	27.94	5.84	2.29	1.52
87897-1104	------	87897-1224	------	------	------	12	------	4	30.48	27.94	5.84	2.29	1.52
87897-1105	------	87897-1225	------	------	------	12	------	5	30.48	27.94	5.84	2.29	1.52
87897-1106	------	87897-1226	------	------	------	12	------	6	30.48	27.94	5.84	2.29	1.52

THIS DRAWING CONTAINS INFORMATION THAT IS PROPRIETARY TO MOLEX ELECTRONIC TECHNOLOGIES, LLC AND SHOULD NOT BE USED WITHOUT WRITTEN PERMISSION

CKT1&2 NO TUBE OPT

EC NO: 600923 2018/07/03
DRWN: FCSOO 2018/08/14
CHK'D: ISHWARG 2018/08/14
APPR: ISHWARG

A4 REV

GENERAL TOLERANCES (UNLESS SPECIFIED)

	MM	INCH
4 PLACES	±	±
3 PLACES	±	±
2 PLACES	± 0.2	±
1 PLACES	±	±
0 PLACES	±	±

ANGULAR TOL ± 3.0

DRAFT WHERE APPLICABLE MUST REMAIN WITHIN DIMENSIONS

DIMENSION UNITS: MM
SCALE: NTS
DRWN BY: YLQIAO DATE: 2005/01/24
CHK'D BY: PTLIM DATE: 2005/02/01
APPR BY: SCLOW DATE: 2005/02/01
DRAWING SIZE: A3
THIRD ANGLE PROJECTION

molex®

SALES DRAWING
SINGLE ROW SINGLE WAFER 2.54MM PITCH, R/A

PRODUCT CUSTOMER DRAWING

SERIES	MATERIAL NUMBER	CUSTOMER
87897	SEE TABLE	GENERAL MARKET

DOCUMENT NUMBER	DOC TYPE	DOC PART	SHEET NUMBER
SD-87897-010	PSD	001	5 OF 15

RELEASE STATUS	P1	RELEASE DATE	2018/08/14 03:47:53

FORMAT: Met-lega-master-tb-prod-A3
REVISION: C
DATE: 2017/02/06

PACKAGING OPTION PART NO.						CKT SIZE	VOID POSITION	PLATING TYPE	DIMENSION				
TRAY WITHOUT CAP	TRAY WITH CAP	TUBE WITHOUT CAP	TUBE WITH CAP	TAPE & REEL WITHOUT CAP	TAPE & REEL WITH CAP				A	B	C	D	E
87897-1301	------	87897-1321	------	------	------	13	------	1	33.02	30.48	5.84	2.29	1.52
87897-1302	------	87897-1322	------	------	------	13	------	2	33.02	30.48	5.84	2.29	1.52
87897-1303	------	87897-1323	------	------	------	13	------	3	33.02	30.48	5.84	2.29	1.52
87897-1304	------	87897-1324	------	------	------	13	------	4	33.02	30.48	5.84	2.29	1.52
87897-1305	------	87897-1325	------	------	------	13	------	5	33.02	30.48	5.84	2.29	1.52
87897-1306	------	87897-1326	------	------	------	13	------	6	33.02	30.48	5.84	2.29	1.52
87897-1401	------	87897-1421	------	------	------	14	------	1	35.56	33.02	5.84	2.29	1.52
87897-1402	------	87897-1422	------	------	------	14	------	2	35.56	33.02	5.84	2.29	1.52
87897-1403	------	87897-1423	------	------	------	14	------	3	35.56	33.02	5.84	2.29	1.52
87897-1404	------	87897-1424	------	------	------	14	------	4	35.56	33.02	5.84	2.29	1.52
87897-1405	------	87897-1425	------	------	------	14	------	5	35.56	33.02	5.84	2.29	1.52
87897-1406	------	87897-1426	------	------	------	14	------	6	35.56	33.02	5.84	2.29	1.52
87897-1501	------	87897-1521	------	------	------	15	------	1	38.10	35.56	5.84	2.29	1.52
87897-1502	------	87897-1522	------	------	------	15	------	2	38.10	35.56	5.84	2.29	1.52
87897-1503	------	87897-1523	------	------	------	15	------	3	38.10	35.56	5.84	2.29	1.52
87897-1504	------	87897-1524	------	------	------	15	------	4	38.10	35.56	5.84	2.29	1.52
87897-1505	------	87897-1525	------	------	------	15	------	5	38.10	35.56	5.84	2.29	1.52
87897-1506	------	87897-1526	------	------	------	15	------	6	38.10	35.56	5.84	2.29	1.52

THIS DRAWING CONTAINS INFORMATION THAT IS PROPRIETARY TO MOLEX ELECTRONIC TECHNOLOGIES, LLC AND SHOULD NOT BE USED WITHOUT WRITTEN PERMISSION

CKT1&2 NO TUBE OPT

EC NO: 600923 2018/07/03
DRWN: FCSOO 2018/08/14
CHK'D: ISHWARG 2018/08/14
APPR: ISHWARG

A4 REV

GENERAL TOLERANCES (UNLESS SPECIFIED)

	MM	INCH
4 PLACES	±	±
3 PLACES	±	±
2 PLACES	± 0.2	±
1 PLACES	±	±
0 PLACES	±	±

ANGULAR TOL ± 3.0

DRAFT WHERE APPLICABLE MUST REMAIN WITHIN DIMENSIONS

DIMENSION UNITS: MM
SCALE: NTS
DRWN BY: YLQIAO DATE: 2005/01/24
CHK'D BY: PTLIM DATE: 2005/02/01
APPR BY: SCLOW DATE: 2005/02/01
DRAWING SIZE: A3
THIRD ANGLE PROJECTION

molex®

SALES DRAWING
SINGLE ROW SINGLE WAFER 2.54MM PITCH, R/A

PRODUCT CUSTOMER DRAWING

SERIES	MATERIAL NUMBER	CUSTOMER
87897	SEE TABLE	GENERAL MARKET

DOCUMENT NUMBER	DOC TYPE	DOC PART	SHEET NUMBER
SD-87897-010	PSD	001	6 OF 15

RELEASE STATUS	P1	RELEASE DATE	2018/08/14 03:47:53

FORMAT: Met-lega-master-tb-prod-A3
REVISION: C
DATE: 2017/02/06

PACKAGING OPTION PART NO.						CKT SIZE	VOID POSITION	PLATING TYPE	DIMENSION				
TRAY WITHOUT CAP	TRAY WITH CAP	TUBE WITHOUT CAP	TUBE WITH CAP	TAPE & REEL WITHOUT CAP	TAPE & REEL WITH CAP				A	B	C	D	E
87897-1601	------	87897-1621	------	------	------	16	------	1	40.64	38.10	5.84	2.29	1.52
87897-1602	------	87897-1622	------	------	------	16	------	2	40.64	38.10	5.84	2.29	1.52
87897-1603	------	87897-1623	------	------	------	16	------	3	40.64	38.10	5.84	2.29	1.52
87897-1604	------	87897-1624	------	------	------	16	------	4	40.64	38.10	5.84	2.29	1.52
87897-1605	------	87897-1625	------	------	------	16	------	5	40.64	38.10	5.84	2.29	1.52
87897-1606	------	87897-1626	------	------	------	16	------	6	40.64	38.10	5.84	2.29	1.52
87897-1701	------	87897-1721	------	------	------	17	------	1	43.18	40.64	5.84	2.29	1.52
87897-1702	------	87897-1722	------	------	------	17	------	2	43.18	40.64	5.84	2.29	1.52
87897-1703	------	87897-1723	------	------	------	17	------	3	43.18	40.64	5.84	2.29	1.52
87897-1704	------	87897-1724	------	------	------	17	------	4	43.18	40.64	5.84	2.29	1.52
87897-1705	------	87897-1725	------	------	------	17	------	5	43.18	40.64	5.84	2.29	1.52
87897-1706	------	87897-1726	------	------	------	17	------	6	43.18	40.64	5.84	2.29	1.52
87897-1801	------	87897-1821	------	------	------	18	------	1	45.72	43.18	5.84	2.29	1.52
87897-1802	------	87897-1822	------	------	------	18	------	2	45.72	43.18	5.84	2.29	1.52
87897-1803	------	87897-1823	------	------	------	18	------	3	45.72	43.18	5.84	2.29	1.52
87897-1804	------	87897-1824	------	------	------	18	------	4	45.72	43.18	5.84	2.29	1.52
87897-1805	------	87897-1825	------	------	------	18	------	5	45.72	43.18	5.84	2.29	1.52
87897-1806	------	87897-1826	------	------	------	18	------	6	45.72	43.18	5.84	2.29	1.52

THIS DRAWING CONTAINS INFORMATION THAT IS PROPRIETARY TO MOLEX ELECTRONIC TECHNOLOGIES, LLC AND SHOULD NOT BE USED WITHOUT WRITTEN PERMISSION

CKT1&2 NO TUBE OPT

EC NO: 600923 2018/07/03
DRWN: FCSOO 2018/08/14
CHK'D: ISHWARG 2018/08/14
APPR: ISHWARG

A4 REV

GENERAL TOLERANCES (UNLESS SPECIFIED)

	MM	INCH
4 PLACES	±	±
3 PLACES	±	±
2 PLACES	± 0.2	±
1 PLACES	±	±
0 PLACES	±	±

ANGULAR TOL ± 3.0

DRAFT WHERE APPLICABLE MUST REMAIN WITHIN DIMENSIONS

DIMENSION UNITS: MM
SCALE: NTS
DRWN BY: YLQIAO DATE: 2005/01/24
CHK'D BY: PTLIM DATE: 2005/02/01
APPR BY: SCLOW DATE: 2005/02/01
DRAWING SIZE: A3
THIRD ANGLE PROJECTION

molex®

SALES DRAWING
SINGLE ROW SINGLE WAFER 2.54MM PITCH, R/A

PRODUCT CUSTOMER DRAWING

SERIES	MATERIAL NUMBER	CUSTOMER
87897	SEE TABLE	GENERAL MARKET

DOCUMENT NUMBER	DOC TYPE	DOC PART	SHEET NUMBER
SD-87897-010	PSD	001	7 OF 15

RELEASE STATUS	P1	RELEASE DATE	2018/08/14 03:47:53

FORMAT: Met-lega-master-tb-prod-A3
REVISION: C
DATE: 2017/02/06

PACKAGING OPTION PART NO.						CKT SIZE	VOID POSITION	PLATING TYPE	DIMENSION				
TRAY WITHOUT CAP	TRAY WITH CAP	TUBE WITHOUT CAP	TUBE WITH CAP	TAPE & REEL WITHOUT CAP	TAPE & REEL WITH CAP				A	B	C	D	E
87897-1901	------	87897-1921	------	------	------	19	------	1	48.26	45.72	5.84	2.29	1.52
87897-1902	------	87897-1922	------	------	------	19	------	2	48.26	45.72	5.84	2.29	1.52
87897-1903	------	87897-1923	------	------	------	19	------	3	48.26	45.72	5.84	2.29	1.52
87897-1904	------	87897-1924	------	------	------	19	------	4	48.26	45.72	5.84	2.29	1.52
87897-1905	------	87897-1925	------	------	------	19	------	5	48.26	45.72	5.84	2.29	1.52
87897-1906	------	87897-1926	------	------	------	19	------	6	48.26	45.72	5.84	2.29	1.52
87897-2001	------	87897-2021	------	------	------	20	------	1	50.80	48.26	5.84	2.29	1.52
87897-2002	------	87897-2122	------	------	------	20	------	2	50.80	48.26	5.84	2.29	1.52
87897-2003	------	87897-2223	------	------	------	20	------	3	50.80	48.26	5.84	2.29	1.52
87897-2004	------	87897-2324	------	------	------	20	------	4	50.80	48.26	5.84	2.29	1.52
87897-2005	------	87897-2425	------	------	------	20	------	5	50.80	48.26	5.84	2.29	1.52
87897-2006	------	87897-2526	------	------	------	20	------	6	50.80	48.26	5.84	2.29	1.52
87897-2101	------	87897-2121	------	------	------	21	------	1	53.34	50.80	5.84	2.29	1.52
87897-2102	------	87897-2122	------	------	------	21	------	2	53.34	50.80	5.84	2.29	1.52
87897-2103	------	87897-2123	------	------	------	21	------	3	53.34	50.80	5.84	2.29	1.52
87897-2104	------	87897-2124	------	------	------	21	------	4	53.34	50.80	5.84	2.29	1.52
87897-2105	------	87897-2125	------	------	------	21	------	5	53.34	50.80	5.84	2.29	1.52
87897-2106	------	87897-2126	------	------	------	21	------	6	53.34	50.80	5.84	2.29	1.52

THIS DRAWING CONTAINS INFORMATION THAT IS PROPRIETARY TO MOLEX ELECTRONIC TECHNOLOGIES, LLC AND SHOULD NOT BE USED WITHOUT WRITTEN PERMISSION

CKT1&2 NO TUBE OPT

EC NO: 600923 2018/07/03
DRWN: FCSOO 2018/08/14
CHK'D: ISHWARG 2018/08/14
APPR: ISHWARG

A4 REV

GENERAL TOLERANCES (UNLESS SPECIFIED)

	MM	INCH
4 PLACES	±	±
3 PLACES	±	±
2 PLACES	± 0.2	±
1 PLACES	±	±
0 PLACES	±	±

ANGULAR TOL ± 3.0

DRAFT WHERE APPLICABLE MUST REMAIN WITHIN DIMENSIONS

DIMENSION UNITS: MM
SCALE: NTS
DRWN BY: YLQIAO DATE: 2005/01/24
CHK'D BY: PTLIM DATE: 2005/02/01
APPR BY: SCLOW DATE: 2005/02/01
DRAWING SIZE: A3
THIRD ANGLE PROJECTION

molex®

SALES DRAWING
SINGLE ROW SINGLE WAFER 2.54MM PITCH, R/A

PRODUCT CUSTOMER DRAWING

SERIES	MATERIAL NUMBER	CUSTOMER
87897	SEE TABLE	GENERAL MARKET

DOCUMENT NUMBER	DOC TYPE	DOC PART	SHEET NUMBER
SD-87897-010	PSD	001	8 OF 15

RELEASE STATUS	P1	RELEASE DATE	2018/08/14 03:47:53

FORMAT: Met-lega-master-tb-prod-A3
REVISION: C
DATE: 2017/02/06

PACKAGING OPTION PART NO.						CKT SIZE	VOID POSITION	PLATING TYPE	DIMENSION				
TRAY WITHOUT CAP	TRAY WITH CAP	TUBE WITHOUT CAP	TUBE WITH CAP	TAPE & REEL WITHOUT CAP	TAPE & REEL WITH CAP				A	B	C	D	E
87897-2201	------	87897-2221	------	------	------	22	------	1	55.88	53.34	5.84	2.29	1.52
87897-2202	------	87897-2222	------	------	------	22	------	2	55.88	53.34	5.84	2.29	1.52
87897-2203	------	87897-2223	------	------	------	22	------	3	55.88	53.34	5.84	2.29	1.52
87897-2204	------	87897-2224	------	------	------	22	------	4	55.88	53.34	5.84	2.29	1.52
87897-2205	------	87897-2225	------	------	------	22	------	5	55.88	53.34	5.84	2.29	1.52
87897-2206	------	87897-2226	------	------	------	22	------	6	55.88	53.34	5.84	2.29	1.52
87897-2301	------	87897-2321	------	------	------	23	------	1	58.42	55.88	5.84	2.29	1.52
87897-2302	------	87897-2322	------	------	------	23	------	2	58.42	55.88	5.84	2.29	1.52
87897-2303	------	87897-2323	------	------	------	23	------	3	58.42	55.88	5.84	2.29	1.52
87897-2304	------	87897-2324	------	------	------	23	------	4	58.42	55.88	5.84	2.29	1.52
87897-2305	------	87897-2325	------	------	------	23	------	5	58.42	55.88	5.84	2.29	1.52
87897-2306	------	87897-2326	------	------	------	23	------	6	58.42	55.88	5.84	2.29	1.52
87897-2401	------	87897-2421	------	------	------	24	------	1	60.96	58.42	5.84	2.29	1.52
87897-2402	------	87897-2422	------	------	------	24	------	2	60.96	58.42	5.84	2.29	1.52
87897-2403	------	87897-2423	------	------	------	24	------	3	60.96	58.42	5.84	2.29	1.52
87897-2404	------	87897-2424	------	------	------	24	------	4	60.96	58.42	5.84	2.29	1.52
87897-2405	------	87897-2425	------	------	------	24	------	5	60.96	58.42	5.84	2.29	1.52
87897-2406	------	87897-2426	------	------	------	24	------	6	60.96	58.42	5.84	2.29	1.52

THIS DRAWING CONTAINS INFORMATION THAT IS PROPRIETARY TO MOLEX ELECTRONIC TECHNOLOGIES, LLC AND SHOULD NOT BE USED WITHOUT WRITTEN PERMISSION

CKT1&2 NO TUBE OPT

EC NO: 600923 2018/07/03
DRWN: FCSOO 2018/08/14
CHK'D: ISHWARG 2018/08/14
APPR: ISHWARG

A4 REV

GENERAL TOLERANCES (UNLESS SPECIFIED)

	MM	INCH
4 PLACES	±	±
3 PLACES	±	±
2 PLACES	± 0.2	±
1 PLACES	±	±
0 PLACES	±	±

ANGULAR TOL ± 3.0

DRAFT WHERE APPLICABLE MUST REMAIN WITHIN DIMENSIONS

DIMENSION UNITS: MM
SCALE: NTS
DRWN BY: YLQIAO DATE: 2005/01/24
CHK'D BY: PTLIM DATE: 2005/02/01
APPR BY: SCLOW DATE: 2005/02/01
DRAWING SIZE: A3
THIRD ANGLE PROJECTION

molex®

SALES DRAWING
SINGLE ROW SINGLE WAFER 2.54MM PITCH, R/A

PRODUCT CUSTOMER DRAWING

SERIES	MATERIAL NUMBER	CUSTOMER
87897	SEE TABLE	GENERAL MARKET

DOCUMENT NUMBER	DOC TYPE	DOC PART	SHEET NUMBER
SD-87897-010	PSD	001	9 OF 15

RELEASE STATUS	P1	RELEASE DATE	2018/08/14 03:47:53

FORMAT: Met-lega-master-tb-prod-A3
REVISION: C
DATE: 2017/02/06

PACKAGING OPTION PART NO.						CKT SIZE	VOID POSITION	PLATING TYPE	DIMENSION				
TRAY WITHOUT CAP	TRAY WITH CAP	TUBE WITHOUT CAP	TUBE WITH CAP	TAPE & REEL WITHOUT CAP	TAPE & REEL WITH CAP				A	B	C	D	E
87897-2501	------	87897-2521	------	------	------	25	------	1	63.50	60.96	5.84	2.29	1.52
87897-2502	------	87897-2522	------	------	------	25	------	2	63.50	60.96	5.84	2.29	1.52
87897-2503	------	87897-2523	------	------	------	25	------	3	63.50	60.96	5.84	2.29	1.52
87897-2504	------	87897-2524	------	------	------	25	------	4	63.50	60.96	5.84	2.29	1.52
87897-2505	------	87897-2525	------	------	------	25	------	5	63.50	60.96	5.84	2.29	1.52
87897-2506	------	87897-2526	------	------	------	25	------	6	63.50	60.96	5.84	2.29	1.52
87897-2601	------	87897-2621	------	------	------	26	------	1	66.04	63.50	5.84	2.29	1.52
87897-2602	------	87897-2622	------	------	------	26	------	2	66.04	63.50	5.84	2.29	1.52
87897-2603	------	87897-2623	------	------	------	26	------	3	66.04	63.50	5.84	2.29	1.52
87897-2604	------	87897-2624	------	------	------	26	------	4	66.04	63.50	5.84	2.29	1.52
87897-2605	------	87897-2625	------	------	------	26	------	5	66.04	63.50	5.84	2.29	1.52
87897-2606	------	87897-2626	------	------	------	26	------	6	66.04	63.50	5.84	2.29	1.52
87897-2701	------	87897-2721	------	------	------	27	------	1	68.58	66.04	5.84	2.29	1.52
87897-2702	------	87897-2722	------	------	------	27	------	2	68.58	66.04	5.84	2.29	1.52
87897-2703	------	87897-2723	------	------	------	27	------	3	68.58	66.04	5.84	2.29	1.52
87897-2704	------	87897-2724	------	------	------	27	------	4	68.58	66.04	5.84	2.29	1.52
87897-2705	------	87897-2725	------	------	------	27	------	5	68.58	66.04	5.84	2.29	1.52
87897-2706	------	87897-2726	------	------	------	27	------	6	68.58	66.04	5.84	2.29	1.52

THIS DRAWING CONTAINS INFORMATION THAT IS PROPRIETARY TO MOLEX ELECTRONIC TECHNOLOGIES, LLC AND SHOULD NOT BE USED WITHOUT WRITTEN PERMISSION

CKT1&2 NO TUBE OPT

EC NO: 600923 2018/07/03
DRWN: FCSOO 2018/08/14
CHK'D: ISHWARG 2018/08/14
APPR: ISHWARG

REV

A4

GENERAL TOLERANCES (UNLESS SPECIFIED)

	MM	INCH
4 PLACES	±	±
3 PLACES	±	±
2 PLACES	± 0.2	±
1 PLACES	±	±
0 PLACES	±	±

ANGULAR TOL ± 3.0

DRAFT WHERE APPLICABLE MUST REMAIN WITHIN DIMENSIONS

DIMENSION UNITS: MM
SCALE: NTS

DRWN BY: YLQIAO DATE: 2005/01/24
CHK'D BY: PTLIM DATE: 2005/02/01
APPR BY: SCLOW DATE: 2005/02/01

DRAWING SIZE: A3
THIRD ANGLE PROJECTION

molex®

SALES DRAWING
SINGLE ROW SINGLE WAFER 2.54MM PITCH, R/A

PRODUCT CUSTOMER DRAWING

SERIES	MATERIAL NUMBER	CUSTOMER
87897	SEE TABLE	GENERAL MARKET

DOCUMENT NUMBER	DOC TYPE	DOC PART	SHEET NUMBER
SD-87897-010	PSD	001	10 OF 15

RELEASE STATUS	P1	RELEASE DATE	2018/08/14 03:47:53

FORMAT: Met-lega-master-tb-prod-A3
REVISION: C
DATE: 2017/02/06

PACKAGING OPTION PART NO.						CKT SIZE	VOID POSITION	PLATING TYPE	DIMENSION				
TRAY WITHOUT CAP	TRAY WITH CAP	TUBE WITHOUT CAP	TUBE WITH CAP	TAPE & REEL WITHOUT CAP	TAPE & REEL WITH CAP				A	B	C	D	E
87897-2801	------	87897-2821	------	------	------	28	------	1	71.12	68.58	5.84	2.29	1.52
87897-2802	------	87897-2822	------	------	------	28	------	2	71.12	68.58	5.84	2.29	1.52
87897-2803	------	87897-2823	------	------	------	28	------	3	71.12	68.58	5.84	2.29	1.52
87897-2804	------	87897-2824	------	------	------	28	------	4	71.12	68.58	5.84	2.29	1.52
87897-2805	------	87897-2825	------	------	------	28	------	5	71.12	68.58	5.84	2.29	1.52
87897-2806	------	87897-2826	------	------	------	28	------	6	71.12	68.58	5.84	2.29	1.52
87897-2901	------	87897-2921	------	------	------	29	------	1	73.66	71.12	5.84	2.29	1.52
87897-2902	------	87897-2922	------	------	------	29	------	2	73.66	71.12	5.84	2.29	1.52
87897-2903	------	87897-2923	------	------	------	29	------	3	73.66	71.12	5.84	2.29	1.52
87897-2904	------	87897-2924	------	------	------	29	------	4	73.66	71.12	5.84	2.29	1.52
87897-2905	------	87897-2925	------	------	------	29	------	5	73.66	71.12	5.84	2.29	1.52
87897-2906	------	87897-2926	------	------	------	29	------	6	73.66	71.12	5.84	2.29	1.52
87897-3001	------	87897-3021	------	------	------	30	------	1	76.20	73.66	5.84	2.29	1.52
87897-3002	------	87897-3022	------	------	------	30	------	2	76.20	73.66	5.84	2.29	1.52
87897-3003	------	87897-3023	------	------	------	30	------	3	76.20	73.66	5.84	2.29	1.52
87897-3004	------	87897-3024	------	------	------	30	------	4	76.20	73.66	5.84	2.29	1.52
87897-3005	------	87897-3025	------	------	------	30	------	5	76.20	73.66	5.84	2.29	1.52
87897-3006	------	87897-3026	------	------	------	30	------	6	76.20	73.66	5.84	2.29	1.52

THIS DRAWING CONTAINS INFORMATION THAT IS PROPRIETARY TO MOLEX ELECTRONIC TECHNOLOGIES, LLC AND SHOULD NOT BE USED WITHOUT WRITTEN PERMISSION

CKT1&2 NO TUBE OPT

EC NO: 600923 2018/07/03
DRWN: FCSOO 2018/08/14
CHK'D: ISHWARG 2018/08/14
APPR: ISHWARG

A4 REV

GENERAL TOLERANCES (UNLESS SPECIFIED)

	MM	INCH
4 PLACES	±	±
3 PLACES	±	±
2 PLACES	± 0.2	±
1 PLACES	±	±
0 PLACES	±	±

ANGULAR TOL ± 3.0

DRAFT WHERE APPLICABLE MUST REMAIN WITHIN DIMENSIONS

DIMENSION UNITS: MM
SCALE: NTS
DRWN BY: YLQIAO DATE: 2005/01/24
CHK'D BY: PTLIM DATE: 2005/02/01
APPR BY: SCLOW DATE: 2005/02/01
DRAWING SIZE: A3
THIRD ANGLE PROJECTION

molex®

SALES DRAWING
SINGLE ROW SINGLE WAFER 2.54MM PITCH, R/A

PRODUCT CUSTOMER DRAWING

SERIES	MATERIAL NUMBER	CUSTOMER
87897	SEE TABLE	GENERAL MARKET

DOCUMENT NUMBER	DOC TYPE	DOC PART	SHEET NUMBER
SD-87897-010	PSD	001	11 OF 15

RELEASE STATUS	P1	RELEASE DATE	2018/08/14 03:47:53

FORMAT: Met-lega-master-tb-prod-A3
REVISION: C
DATE: 2017/02/06

PACKAGING OPTION PART NO.						CKT SIZE	VOID POSITION	PLATING TYPE	DIMENSION				
TRAY WITHOUT CAP	TRAY WITH CAP	TUBE WITHOUT CAP	TUBE WITH CAP	TAPE & REEL WITHOUT CAP	TAPE & REEL WITH CAP				A	B	C	D	E
87897-3101	------	87897-3121	------	------	------	31	------	1	78.74	76.2	5.84	2.29	1.52
87897-3102	------	87897-3122	------	------	------	31	------	2	78.74	76.2	5.84	2.29	1.52
87897-3103	------	87897-3123	------	------	------	31	------	3	78.74	76.2	5.84	2.29	1.52
87897-3104	------	87897-3124	------	------	------	31	------	4	78.74	76.2	5.84	2.29	1.52
87897-3105	------	87897-3125	------	------	------	31	------	5	78.74	76.2	5.84	2.29	1.52
87897-3106	------	87897-3126	------	------	------	31	------	6	78.74	76.2	5.84	2.29	1.52
87897-3201	------	87897-3221	------	------	------	32	------	1	81.28	78.74	5.84	2.29	1.52
87897-3202	------	87897-3222	------	------	------	32	------	2	81.28	78.74	5.84	2.29	1.52
87897-3203	------	87897-3223	------	------	------	32	------	3	81.28	78.74	5.84	2.29	1.52
87897-3204	------	87897-3224	------	------	------	32	------	4	81.28	78.74	5.84	2.29	1.52
87897-3205	------	87897-3225	------	------	------	32	------	5	81.28	78.74	5.84	2.29	1.52
87897-3206	------	87897-3226	------	------	------	32	------	6	81.28	78.74	5.84	2.29	1.52
87897-3301	------	87897-3321	------	------	------	33	------	1	83.82	81.28	5.84	2.29	1.52
87897-3302	------	87897-3322	------	------	------	33	------	2	83.82	81.28	5.84	2.29	1.52
87897-3303	------	87897-3323	------	------	------	33	------	3	83.82	81.28	5.84	2.29	1.52
87897-3304	------	87897-3324	------	------	------	33	------	4	83.82	81.28	5.84	2.29	1.52
87897-3305	------	87897-3325	------	------	------	33	------	5	83.82	81.28	5.84	2.29	1.52
87897-3306	------	87897-3326	------	------	------	33	------	6	83.82	81.28	5.84	2.29	1.52

THIS DRAWING CONTAINS INFORMATION THAT IS PROPRIETARY TO MOLEX ELECTRONIC TECHNOLOGIES, LLC AND SHOULD NOT BE USED WITHOUT WRITTEN PERMISSION

CKT1&2 NO TUBE OPT

EC NO: 600923 2018/07/03
DRWN: FCSOO 2018/08/14
CHK'D: ISHWARG 2018/08/14
APPR: ISHWARG

REV

A4

GENERAL TOLERANCES (UNLESS SPECIFIED)

	MM	INCH
4 PLACES	±	±
3 PLACES	±	±
2 PLACES	± 0.2	±
1 PLACES	±	±
0 PLACES	±	±

ANGULAR TOL ± 3.0

DRAFT WHERE APPLICABLE MUST REMAIN WITHIN DIMENSIONS

DIMENSION UNITS: MM
SCALE: NTS

DRWN BY: YLQIAO DATE: 2005/01/24
CHK'D BY: PTLIM DATE: 2005/02/01
APPR BY: SCLOW DATE: 2005/02/01

DRAWING SIZE: A3
THIRD ANGLE PROJECTION

molex®

SALES DRAWING
SINGLE ROW SINGLE WAFER 2.54MM PITCH, R/A

PRODUCT CUSTOMER DRAWING

SERIES	MATERIAL NUMBER	CUSTOMER
87897	SEE TABLE	GENERAL MARKET

DOCUMENT NUMBER	DOC TYPE	DOC PART	SHEET NUMBER
SD-87897-010	PSD	001	12 OF 15

RELEASE STATUS	P1	RELEASE DATE	2018/08/14 03:47:53

FORMAT: Met-lega-master-tb-prod-A3
REVISION: C
DATE: 2017/02/06

PACKAGING OPTION PART NO.						CKT SIZE	VOID POSITION	PLATING TYPE	DIMENSION				
TRAY WITHOUT CAP	TRAY WITH CAP	TUBE WITHOUT CAP	TUBE WITH CAP	TAPE & REEL WITHOUT CAP	TAPE & REEL WITH CAP				A	B	C	D	E
87897-3401	------	87897-3421	------	------	------	34	------	1	86.36	83.82	5.84	2.29	1.52
87897-3402	------	87897-3422	------	------	------	34	------	2	86.36	83.82	5.84	2.29	1.52
87897-3403	------	87897-3423	------	------	------	34	------	3	86.36	83.82	5.84	2.29	1.52
87897-3404	------	87897-3424	------	------	------	34	------	4	86.36	83.82	5.84	2.29	1.52
87897-3405	------	87897-3425	------	------	------	34	------	5	86.36	83.82	5.84	2.29	1.52
87897-3406	------	87897-3426	------	------	------	34	------	6	86.36	83.82	5.84	2.29	1.52
87897-3501	------	87897-3521	------	------	------	35	------	1	88.90	86.36	5.84	2.29	1.52
87897-3502	------	87897-3522	------	------	------	35	------	2	88.90	86.36	5.84	2.29	1.52
87897-3503	------	87897-3523	------	------	------	35	------	3	88.90	86.36	5.84	2.29	1.52
87897-3504	------	87897-3524	------	------	------	35	------	4	88.90	86.36	5.84	2.29	1.52
87897-3505	------	87897-3525	------	------	------	35	------	5	88.90	86.36	5.84	2.29	1.52
87897-3506	------	87897-3526	------	------	------	35	------	6	88.90	86.36	5.84	2.29	1.52
87897-3601	------	87897-3621	------	------	------	36	------	1	91.44	88.90	5.84	2.29	1.52
87897-3602	------	87897-3622	------	------	------	36	------	2	91.44	88.90	5.84	2.29	1.52
87897-3603	------	87897-3623	------	------	------	36	------	3	91.44	88.90	5.84	2.29	1.52
87897-3604	------	87897-3624	------	------	------	36	------	4	91.44	88.90	5.84	2.29	1.52
87897-3605	------	87897-3625	------	------	------	36	------	5	91.44	88.90	5.84	2.29	1.52
87897-3606	------	87897-3626	------	------	------	36	------	6	91.44	88.90	5.84	2.29	1.52

THIS DRAWING CONTAINS INFORMATION THAT IS PROPRIETARY TO MOLEX ELECTRONIC TECHNOLOGIES, LLC AND SHOULD NOT BE USED WITHOUT WRITTEN PERMISSION

CKT1&2 NO TUBE OPT

EC NO: 600923 2018/07/03
DRWN: FCSOO 2018/08/14
CHK'D: ISHWARG 2018/08/14
APPR: ISHWARG

A4 REV

GENERAL TOLERANCES (UNLESS SPECIFIED)

	MM	INCH
4 PLACES	±	±
3 PLACES	±	±
2 PLACES	± 0.2	±
1 PLACES	±	±
0 PLACES	±	±

ANGULAR TOL ± 3.0

DRAFT WHERE APPLICABLE MUST REMAIN WITHIN DIMENSIONS

DIMENSION UNITS: MM
SCALE: NTS

DRWN BY: YLQIAO DATE: 2005/01/24
CHK'D BY: PTLIM DATE: 2005/02/01
APPR BY: SCLOW DATE: 2005/02/01

DRAWING SIZE: A3
THIRD ANGLE PROJECTION

molex®

SALES DRAWING
SINGLE ROW SINGLE WAFER 2.54MM PITCH, R/A

PRODUCT CUSTOMER DRAWING

SERIES	MATERIAL NUMBER	CUSTOMER
87897	SEE TABLE	GENERAL MARKET

DOCUMENT NUMBER	DOC TYPE	DOC PART	SHEET NUMBER
SD-87897-010	PSD	001	13 OF 15

RELEASE STATUS	P1	RELEASE DATE	2018/08/14 03:47:53

FORMAT: Met-lega-master-tb-prod-A3
REVISION: C
DATE: 2017/02/06

PACKAGING OPTION PART NO.						CKT SIZE	VOID POSITION	PLATING TYPE	DIMENSION				
TRAY WITHOUT CAP	TRAY WITH CAP	TUBE WITHOUT CAP	TUBE WITH CAP	TAPE & REEL WITHOUT CAP	TAPE & REEL WITH CAP				A	B	C	D	E
87897-3701	------	87897-3721	------	------	------	37	------	1	93.98	91.44	5.84	2.29	1.52
87897-3702	------	87897-3722	------	------	------	37	------	2	93.98	91.44	5.84	2.29	1.52
87897-3703	------	87897-3723	------	------	------	37	------	3	93.98	91.44	5.84	2.29	1.52
87897-3704	------	87897-3724	------	------	------	37	------	4	93.98	91.44	5.84	2.29	1.52
87897-3705	------	87897-3725	------	------	------	37	------	5	93.98	91.44	5.84	2.29	1.52
87897-3706	------	87897-3726	------	------	------	37	------	6	93.98	91.44	5.84	2.29	1.52
87897-3801	------	87897-3821	------	------	------	38	------	1	96.52	93.98	5.84	2.29	1.52
87897-3802	------	87897-3822	------	------	------	38	------	2	96.52	93.98	5.84	2.29	1.52
87897-3803	------	87897-3823	------	------	------	38	------	3	96.52	93.98	5.84	2.29	1.52
87897-3804	------	87897-3824	------	------	------	38	------	4	96.52	93.98	5.84	2.29	1.52
87897-3805	------	87897-3825	------	------	------	38	------	5	96.52	93.98	5.84	2.29	1.52
87897-3806	------	87897-3826	------	------	------	38	------	6	96.52	93.98	5.84	2.29	1.52
87897-3901	------	87897-3921	------	------	------	39	------	1	99.06	96.52	5.84	2.29	1.52
87897-3902	------	87897-3922	------	------	------	39	------	2	99.06	96.52	5.84	2.29	1.52
87897-3903	------	87897-3923	------	------	------	39	------	3	99.06	96.52	5.84	2.29	1.52
87897-3904	------	87897-3924	------	------	------	39	------	4	99.06	96.52	5.84	2.29	1.52
87897-3905	------	87897-3925	------	------	------	39	------	5	99.06	96.52	5.84	2.29	1.52
87897-3906	------	87897-3926	------	------	------	39	------	6	99.06	96.52	5.84	2.29	1.52

THIS DRAWING CONTAINS INFORMATION THAT IS PROPRIETARY TO MOLEX ELECTRONIC TECHNOLOGIES, LLC AND SHOULD NOT BE USED WITHOUT WRITTEN PERMISSION

CKT1&2 NO TUBE OPT

EC NO: 600923 2018/07/03
DRWN: FCSOO 2018/08/14
CHK'D: ISHWARG 2018/08/14
APPR: ISHWARG

REV

A4

GENERAL TOLERANCES (UNLESS SPECIFIED)

	MM	INCH
4 PLACES	±	±
3 PLACES	±	±
2 PLACES	± 0.2	±
1 PLACES	±	±
0 PLACES	±	±

ANGULAR TOL ± 3.0

DRAFT WHERE APPLICABLE MUST REMAIN WITHIN DIMENSIONS

DIMENSION UNITS: MM
SCALE: NTS
DRWN BY: YLQIAO DATE: 2005/01/24
CHK'D BY: PTLIM DATE: 2005/02/01
APPR BY: SCLOW DATE: 2005/02/01
DRAWING SIZE: A3
THIRD ANGLE PROJECTION

molex®

SALES DRAWING
SINGLE ROW SINGLE WAFER 2.54MM PITCH, R/A

PRODUCT CUSTOMER DRAWING

SERIES	MATERIAL NUMBER	CUSTOMER
87897	SEE TABLE	GENERAL MARKET

DOCUMENT NUMBER	DOC TYPE	DOC PART	SHEET NUMBER
SD-87897-010	PSD	001	14 OF 15

RELEASE STATUS	P1	RELEASE DATE	2018/08/14 03:47:53

FORMAT: Met-lega-master-tb-prod-A3
REVISION: C
DATE: 2017/02/06

PACKAGING OPTION PART NO.						CKT SIZE	VOID POSITION	PLATING TYPE	DIMENSION				
TRAY WITHOUT CAP	TRAY WITH CAP	TUBE WITHOUT CAP	TUBE WITH CAP	TAPE & REEL WITHOUT CAP	TAPE & REEL WITH CAP				A	B	C	D	E
87897-4001	------	87897-4021	------	------	------	40	------	1	101.6	99.06	5.84	2.29	1.52
87897-4002	------	87897-4022	------	------	------	40	------	2	101.6	99.06	5.84	2.29	1.52
87897-4003	------	87897-4023	------	------	------	40	------	3	101.6	99.06	5.84	2.29	1.52
87897-4004	------	87897-4024	------	------	------	40	------	4	101.6	99.06	5.84	2.29	1.52
87897-4005	------	87897-4025	------	------	------	40	------	5	101.6	99.06	5.84	2.29	1.52
87897-4006	------	87897-4026	------	------	------	40	------	6	101.6	99.06	5.84	2.29	1.52

THIS DRAWING CONTAINS INFORMATION THAT IS PROPRIETARY TO MOLEX ELECTRONIC TECHNOLOGIES, LLC AND SHOULD NOT BE USED WITHOUT WRITTEN PERMISSION

CKT1&2 NO TUBE OPT

EC NO: 600923 2018/07/03
DRWN: FCSOO 2018/08/14
CHK'D: ISHWARG 2018/08/14
APPR: ISHWARG

A4 REV

GENERAL TOLERANCES (UNLESS SPECIFIED)

	MM	INCH
4 PLACES	±	±
3 PLACES	±	±
2 PLACES	± 0.2	±
1 PLACES	±	±
0 PLACES	±	±

ANGULAR TOL ± 3.0

DRAFT WHERE APPLICABLE MUST REMAIN WITHIN DIMENSIONS

DIMENSION UNITS: MM
SCALE: NTS

DRWN BY: YLQIAO DATE: 2005/01/24
CHK'D BY: PTLIM DATE: 2005/02/01
APPR BY: SCLOW DATE: 2005/02/01

DRAWING SIZE: A3
THIRD ANGLE PROJECTION

molex®

SALES DRAWING
SINGLE ROW SINGLE WAFER 2.54MM PITCH, R/A

PRODUCT CUSTOMER DRAWING

SERIES	MATERIAL NUMBER	CUSTOMER
87897	SEE TABLE	GENERAL MARKET

DOCUMENT NUMBER	DOC TYPE	DOC PART	SHEET NUMBER
SD-87897-010	PSD	001	15 OF 15

RELEASE STATUS	P1	RELEASE DATE	2018/08/14 03:47:53

FORMAT: Met-lega-master-tb-prod-A3
REVISION: C
DATE: 2017/02/06

Mouser Electronics

Authorized Distributor

Click to View Pricing, Inventory, Delivery & Lifecycle Information:

Molex:
87897-4006