THIS DRAWING IS UNPUBLISHED. RELEASED FOR PUBLICATION -,- .
© COPYRIGHT - By - ALL RIGHTS RESERVED.

REVISIONS

P	LTR	DESCRIPTION	DATE	DWN	APVD
	C1	REVISED PER ECO-11-004820	11MAR11	RK	HMR
	D	REVISED PER ECO-17-000037	10MAR2017	RS	MZ

NOTES:

1. MATERIAL: NEOPRENE, BLACK.
2. OBSOLETE PART NUMER.

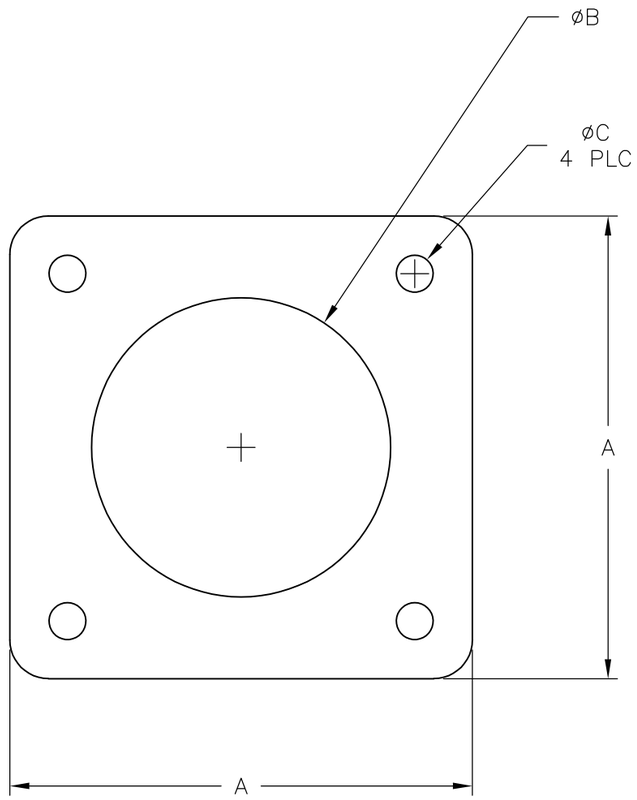

	C	B	A	CPC SHELL SIZE	PART NO.
2	.125	1.030	1.185	14	81665-8
2	.120	1.110	1.530	22	81665-7
2	.142	1.492	1.950	28	81665-6
	.145	1.488	1.875	23	81665-5
	.120	.862	1.375	13	81665-4
	.120	.737	1.188	11	81665-3
	.145	1.100	1.500	17	81665-2
	.120	.970	1.500	-	81665-1

THIS DRAWING IS A CONTROLLED DOCUMENT.

DIMENSIONS: INCHES

TOLERANCES UNLESS OTHERWISE SPECIFIED:

0 PLC	± -
1 PLC	± -
2 PLC	± -
3 PLC	± .015
4 PLC	± -
ANGLES	± -

MATERIAL: 1

FINISH: -

DWN S SCHLEGEL 16JUL03
CHK S HEADER 7/16/03
APVD S HEADER 7/16/03
PRODUCT SPEC —
APPLICATION SPEC —
WEIGHT —

TE Connectivity

NAME: GASKET, FLANGE, CPC

SIZE	CAGE CODE	DRAWING NO	RESTRICTED TO
A3	00779	C-81665	—

CUSTOMER DRAWING

SCALE NTS | SHEET 1 OF 1 | REV D

Mouser Electronics

Authorized Distributor

Click to View Pricing, Inventory, Delivery & Lifecycle Information:

TE Connectivity:
81665-1