THIS DRAWING IS UNPUBLISHED. RELEASED FOR PUBLICATION 20
© COPYRIGHT 20 BY TYCO ELECTRONICS CORPORATION. ALL RIGHTS RESERVED.

LOC	DIST
A	66

REVISIONS

P	LTR	DESCRIPTION	DATE	DWN	APVD
	A	RELEASED	29MAR2007	BH	BH

PART NUMBER	REV	FIRST USED	POWER UNIT	FEED TYPE
1852411-1	A	122500-1	LEADMAKER & BENCH MODEL G	POST FEED
1852411-2	A	565435-5	BENCH MODEL K	POST FEED
7-1852411-7	A	-	SPARE PARTS	-

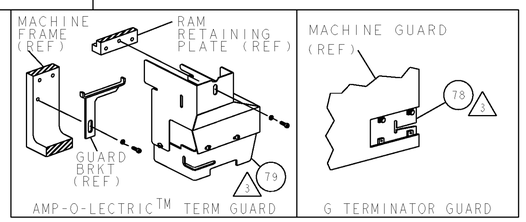

TERMINAL NAME: FASTIN-FASTON TAB W/INSULATION SUPPORT					
TYCO PN	-	AMP TERMINAL - AMP CRIMP SPECS			
141051-2	-				
-	-	PAD LTR	CRIMP HEIGHT		WIRE SIZE 4
-	-	A	.046±.002[1.17±0.05mm]		(2)22 1/2 or 0.60mm2
-	-	B	.044±.002[1.12±0.05mm]		(2)23 3/4 or 0.52mm2
-	-	C	.043±.002[1.09±0.05mm]		(2)24 1/4 or 0.50mm2
-	-	D	.042±.002[1.07±0.05mm]		(2)24 1/2 or 0.48mm2
-	-	CRIMP	SIZE	TYPE	RANGE
-	-				
-	-	WIRE	.080 [2.03mm]	F	(2)0.48mm-(2)0.6mm
-	-	INSUL	.100 [2.54mm]	F	Ø.090 MAX
WIRE STRIP LENGTH .208 -.223	TERM APPL SPEC NONE	FEED 1.180	APPL INSTRUCTIONS 408-8039	SET UP GAGE 458638-1	

1. RECOMMENDED SPARE PARTS
2. GREASE LIGHTLY
3. GUARD MUST BE IN PLACE WHEN OPERATING APPLICATOR IN A BENCH MACHINE
4. ALL WIRE IS MAGNET WIRE SIZES.

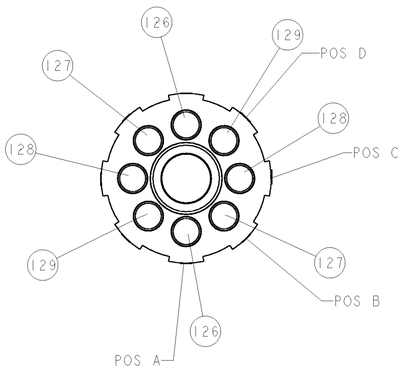

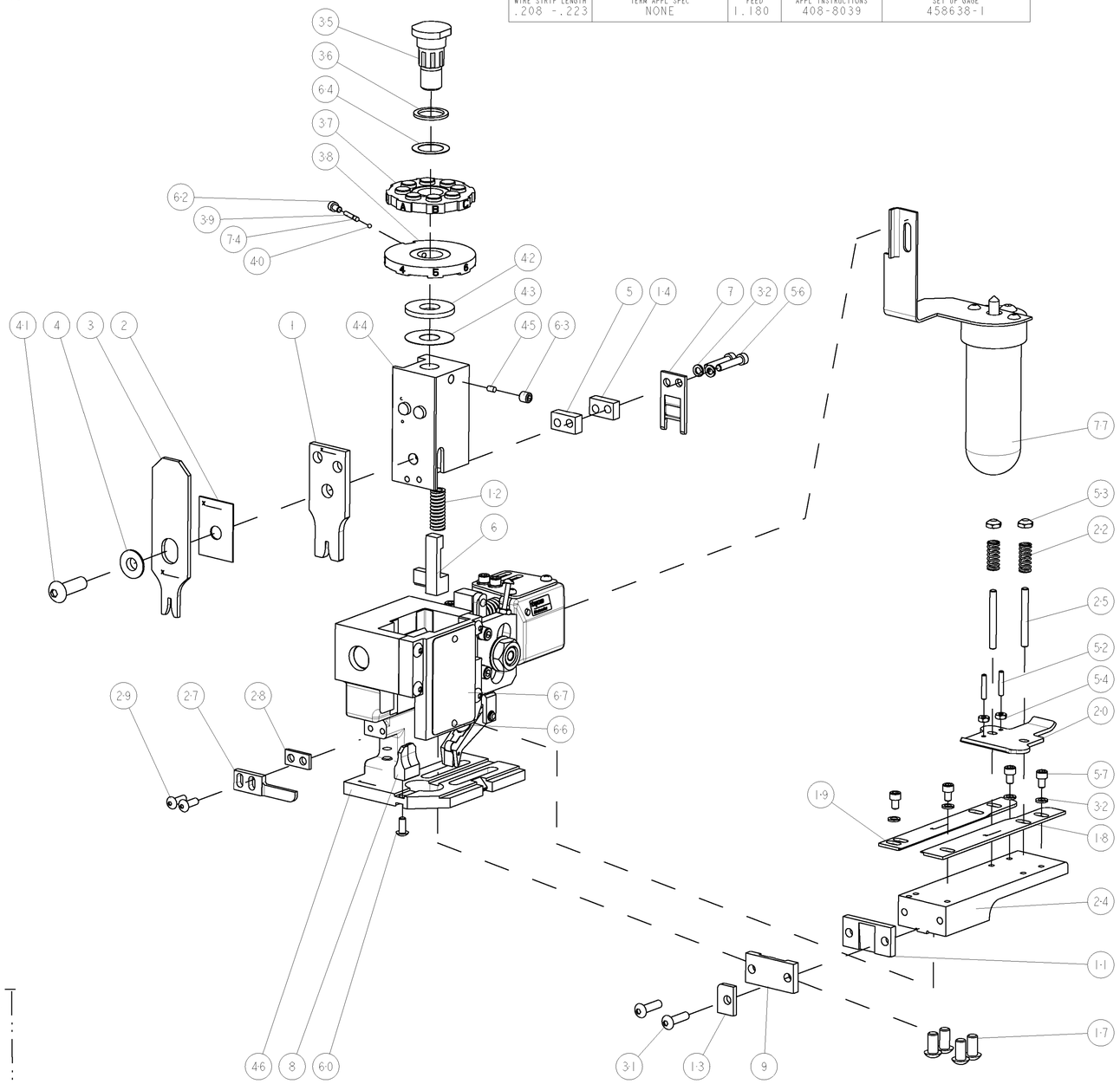

-	2	2	·	-	5-354779-4	PIN, WIRE DISC, .3260	129
-	2	2	·	-	4-354779-9	PIN, WIRE DISC, .3235	128
-	2	2	·	-	4-354779-7	PIN, WIRE DISC, .3225	127
-	2	2	·	-	4-354779-0	PIN, WIRE DISC, .3190	126
-	1	1		-	2-21000-5	SCR, SKT HD CAP 8-32 X .250	86
3 -	REF	-		..	455745-1	GUARD WINDOW	79
3 -	-	REF		..	679532-1	INSERT, GUARD	78
-	1	-		-	465184-9	LUBRICATOR ASSY	77
-	1	1		-	690603-1	SPRING ASSIST AMP-O-MATOR APPLICATOR	74
-	1	1		-	217238-1	GENERAL INSTRUCTION PKG	72
-	1	1		-	4088039	EF APPL INST 408-8039	71
-	1	1		-	461264-1	PLATE, IDENTIFICATION	67
-	2	2	·	-	21017-2	SCREW, DRIVE	66
-	1	1		-	986950-1	WASHER, FLAT PRECISION	64
-	1	1		-	21009-2	SCR, SET, SELF LOCKING 1/4-20 X .250	63
-	1	1		-	23030-1	SCR, SKT HD CAP 6-32 x .25	62
-	1	1		-	22733-8	SCR, BHSC, SELF-LOCKING, 8-32 X .375	60
-	3	3		-	2-21000-5	SCR, SKT HD CAP 8-32 X .250	57
-	2	2	·	-	3-21000-0	SCR, SKT HD CAP 8-32 X .875	56
-	2	2	·	-	21018-4	NUT, HEX, REG 4-40	54
-	2	2	·	-	21022-2	NUT, LOCK, HEX, TORQUE, 8-32	53
-	2	2	·	-	2-21006-6	SCR, SET, CUP POINT 4-40 X .625	52
-	1	1		..	1-21002-7	SCR, BTN SKT CAP 6-32 X .375	49
-	1	-		..	690501-3	CAM, POST FEED, 1 1/8	48
-	-	1		-	690501-4	CAM, POST FEED, 1 5/8	47
-	1	1		-	458980-7	SUB ASSY, APPLICATOR FRAME	46
-	1	1		-	690191-1	PLUG,NYLON	45
-	1	1		-	455674-1	RAM	44
-	1	1		-	690125-1	SHIM SUB-ASSY	43
-	1	1		-	690124-1	WASHER, RAM (.115)	42
-	1	1		-	7-21002-9	SCR, BTN SKT HD CAP 5/16-24 X 1.00	41
-	1	1		-	23241-6	BALL, STEEL	40
-	1	1		-	690170-1	SPRING, COMPRESSION	39
-	1	1		-	690142-1	DISC, INSULATION	38
-	1	1		-	354777-1	WIRE DISC, ASSEMBLY	37
-	1	1		-	22480-5	SPRING, COMPRESSION	36
-	1	1		-	690212-1	POST, RAM	35
-	6	6	·	-	21024-4	WASHER, SPRG LOCK, REG NO 8	32
-	2	2	·	-	2-21002-9	SCR, BTN SKT HD CAP 10-32 X .750	31
-	2	2	·	-	2-21002-2	SCR, BTN SKT HD CAP 8-32 X .500	29
-	1	1		-	1-690451-1	SPACER, STRIPPER	28
-	1	1		-	240639-1	STRIPPER (MACHINING)	27
-	2	2	·	-	22354-8	STUD, THREADED	25
-	1	1		-	455678-1	PLATE, STRIP GUIDE	24
-	2	2	·	-	4-22281-1	SPRING, DRAG	22
-	1	1		-	454177-1	DRAG	20
-	1	1		-	1-458030-2	STRIP GUIDE, REAR	19
-	1	1		-	1-458031-2	STRIP GUIDE, FRONT	18
-	4	4	·	-	3-21002-3	SCR, BTN SKT HD CAP 1/4-20 X .500	17
-	1	1		-	6-240641-5	SPACER	14
-	1	1		-	690481-5	SPACER, HOLD DOWN	13
-	1	1		-	23846-1	SPRING, DIE	12
1 -	1	1		-	240644-1	PLATE, REAR SHEAR	11
1 -	1	1		-	690482-3	PLATE, FRONT SHEAR	9
1	1	1		-	1-1633248-0	ANVIL, COMBINATION	8
1 -	1	1		-	690474-3	BLADE, SLUG	7
-	1	1		-	6-455892-3	HOLD DOWN, TERMINAL	6
-	1	1		-	4-240641-5	SPACER	5
-	1	1		-	3-238009-5	BLOCK, FL CRIMPER SPACER	4
1	1	1		-	4-683453-7	CRIMPER, INSULATION PREMIUM	3
-	1	1		-	455888-8	SPACER, CRIMPER	2
1	1	1		-	456405-3	CRIMPER, WIRE PREMIUM	1
-77	-2	-1		U/M	PART NO	DESCRIPTION	ITEM NO

POST-FEED 1 5/8 STROKE

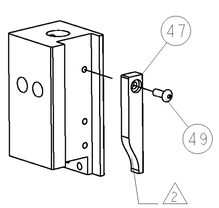

LEADMAKER & G TERMINATOR BENCH MACHINE

POST-FEED 1 1/8 STROKE

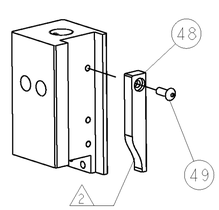

K TERMINATOR BENCH MACHINE

THIS DRAWING IS A CONTROLLED DOCUMENT FOR TYCO ELECTRONICS CORPORATION. IT IS SUBJECT TO CHANGE AND THE CONTROLLING ENGINEERING ORGANIZATION SHOULD BE CONTACTED FOR THE LATEST REVISION.

DWN	B HIGMAN	19JAN2007
CHK	B HIGMAN	19JAN2007
APVD	T ELBIN	19JAN2007

tyco Electronics — Tyco Electronics, Harrisburg, PA 17105-3608

DIMENSIONS: INCHES

TOLERANCES UNLESS OTHERWISE SPECIFIED:
0 PLC ±-
1 PLC ±0.1
2 PLC ±0.01
3 PLC ±0.001
4 PLC ±0.0001
ANGLES ±-

MATERIAL - -

FINISH - -

PRODUCT SPEC -

APPLICATION SPEC -

WEIGHT -

NAME: END FEED HDM APPLICATOR

SIZE	CAGE CODE	DRAWING NO	RESTRICTED TO
A1	00779	C-1852411	-

CUSTOMER DRAWING — SCALE 3:5 — SHEET 1 OF 1 — REV A

CUSTOMER VIEWABLE ASSEMBLY

Mouser Electronics

Authorized Distributor

Click to View Pricing, Inventory, Delivery & Lifecycle Information:

TE Connectivity:

1852411-1