SYMBOL DEFINITION			MISSING SYMBOLS
A DIMENSION WITHOUT AN INSPECTION REPORT SYMBOL ⬭ DOES NOT REQUIRE INSPECTION. IT MAY BE CONTROLLED ON THE INDIVIDUAL COMPONENT DRAWING.	TOTAL NO OF INSPECTIONS REQUIRED	10	NO MISSING SYMBOL NUMBER
	LAST NO. USED	10	

DWG STATUS					ZONE	REVISION HISTORY	AUTH	DR	CK	APVD
DATE	STG	REV	CHG	N/P						
01MR01	R	004	-	-		REDRAWN TO PD, REVISED GRAPHICS	206906	CJP	CJP	ET
09MY01	R	004	-	AA		APPLIED NOTE #2 TO DIM #1 & CHANGED DIM #2 TO REF	209535	CJC	CJC	JM
27JL01	R	004	-	AB		ADDED TWO EJECTOR PADS	212371	PG	PG	ET
03AP02	R	004	-	AC		UPDATED PDM ATTRIBUTES	223253	BRB	BRB	WM

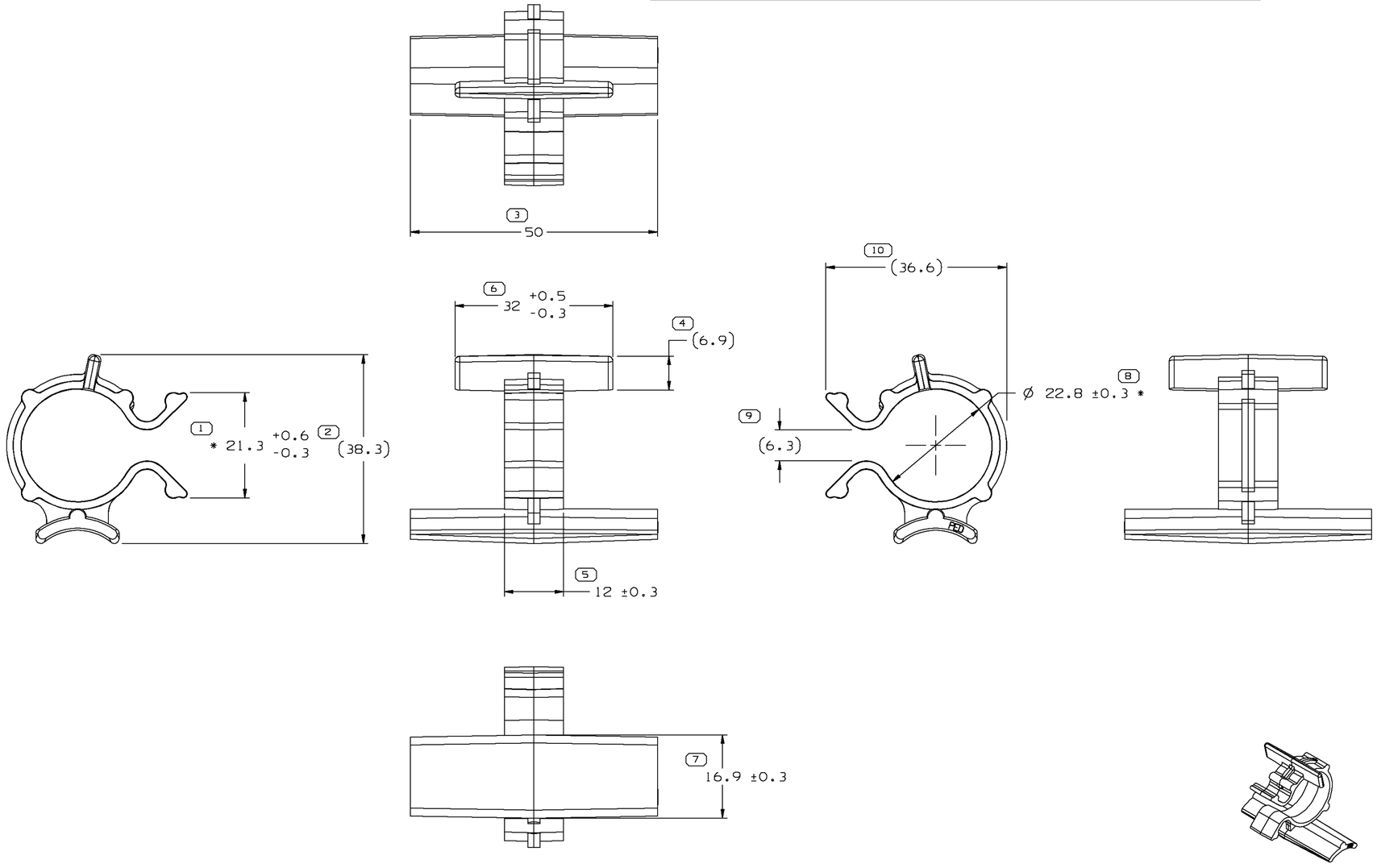

NOTES

1. UNLESS OTHERWISE SPECIFIED AND/OR INDICATED: DIMENSIONS ARE TO FACE OF VIEW SHOWN AND AUTOMATICALLY ROUNDED BY COMPUTER FOR INSPECTION. (SEE MATH MODEL FOR PRECISE DIMENSIONS.) FOR ALL OTHER DIMENSIONS NOT SHOWN BUT REQUIRED FOR TOOL BUILD, SEE MATH MODEL FOR PRECISE TOOL PATH DATA. DRAFT IS 1° ON ALL OUTSIDE SURFACES OR UNLESS OTHERWISE SPECIFIED.

2. DIMENSIONS MARKED "*" TO BE CHECKED WITH 6.3 REF DIMENSION HELD AT 6.3 NOMINAL.

PROCESS SENSITIVE DIMENSION

DIMENSIONS ENCLOSED IN ( ) INDICATE REFERENCE DIMENSIONS AND NO TOLERANCE LIMITS ARE ESTABLISHED

R 0.1 MAX
R 0.2 MAX
SHARP CORNER TOLERANCE

DIMENSIONAL RANGE (MM)										CHART E1
FROM	0	> 20	> 30	> 70	> 100	> 150	> 200	> 250	> 300	
TO	20	30	70	100	150	200	250	300	400	
TOLERANCE UNLESS OTHERWISE SPECIFIED										
	±0.15	±0.2	±0.3	±0.4	±0.5	±0.6	±0.8	±1	±1.2	
ANGULAR TOLERANCE ± 2°										

DELPHI Automotive Systems

MATERIAL SPEC
PM002043 002 PP-T40 BLK

SUBSTANCES OF CONCERN AND RECYCLED CONTENT PER DELPHI-A 10949001

PART DRAWING

DISTR CODE: D

CODE NUMBER	DWG DATE	SCALE
6901	28MR94	2:1
QC SPEC	STYLE	VOLUME cm³ 4.991

PART GEOMETRY
3D SOLID

UG
CHANGE RESTRICTED
NO MANUAL CHANGES

COPY OF MATH DATA
DO NOT SCALE

METRIC
UNLESS OTHERWISE SPECIFIED, ALL DIMENSIONS ARE IN MILLIMETERS

THIRD ANGLE PROJECTION

UNLESS OTHERWISE SPECIFIED:
THIS DOCUMENT IS IN ACCORDANCE WITH ASME Y14.5M - 1994 AS AMENDED BY THE GM GLOBAL DIMENSIONING AND TOLERANCING ADDENDUM - 1997. ALL GEOMETRIC TOLERANCES AND RELATED DATUMS APPLY RFS. RULE #1 (PERFECT FORM AT MMC) DOES NOT APPLY WHEN RELATIONSHIP BETWEEN FEATURES IS ESTABLISHED BY ORIENTATION OR LOCATION TOLERANCES. SEPARATE POSITION CALLOUTS MAY BE GAGED SEPARATELY REGARDLESS OF DATUM REFERENCES.

REFERENCE	DR		DATE
	APVD1	D. ELLWOOD	28MR94
	APVD2	D. ELLWOOD	28MR94
	APVD3	WAYNE AUBEL	30MR94
	APVD4		
	APVD5		

DRAWING NAME
CLIP HARN

SHEET NUMBER	DRAWING NUMBER	DWG STATUS			SIZE
		STG	REV	N/P	
1 OF 1	12160306	R	004	AC	A1

DELPHI PACKARD ELECTRIC SYSTEMS
WARREN, OHIO 44486

Mouser Electronics

Authorized Distributor

Click to View Pricing, Inventory, Delivery & Lifecycle Information:

Aptiv:
12160306