THIS DRAWING IS UNPUBLISHED. RELEASED FOR PUBLICATION 20
© COPYRIGHT 20 BY TYCO ELECTRONICS CORPORATION. ALL RIGHTS RESERVED.

PART NUMBER	REV	FIRST USED	POWER UNIT	FEED TYPE
1852023-1	A	122500-1	LEADMAKER	POST FEED
1852023-2	A	565435-5	BENCH MODEL K	PRE FEED
1852023-3	A	354500-1	BENCH MODEL G	PRE FEED

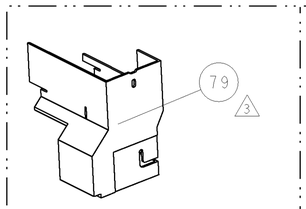

AMP-O-LECTRIC TERM GUARD

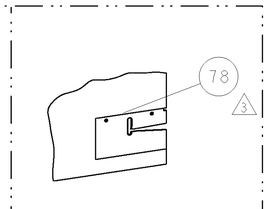

G TERMINATOR GUARD

TERMINAL NAME: 090-11 FEMALE SEALED 4					
TYCO PN	MANF PN	YAZAKI TERMINAL - AMP CRIMP SPEC			
1572689	7116-4027				
-	-	PAD LTR	CRIMP HEIGHT		WIRE SIZE
-	-	A	.066±.002[1.68±0.05mm]		14 AWG
-	-	B	-		-
-	-	C	-		-
-	-	D	-		-
-	-	CRIMP	SIZE	TYPE	RANGE
SEAL PN.	-				
TYCO PN	MANF PN	WIRE	.100 [2.54mm]	F	14 AWG
1572690-1	42816	INSUL	.170 [4.32mm]	O	Ø.155 MAX
WIRE STRIP LENGTH .169 -.184	TERM APPL SPEC NONE	FEED .516	APPL INSTRUCTIONS 408-8040		SET UP GAGE 458637-1

1. RECOMMENDED SPARE PARTS
2. GREASE LIGHTLY
3. GUARD MUST BE IN PLACE WHEN OPERATING APPLICATOR IN A BENCH MACHINE
4. THIS APPLICATOR APPLIES TERMINAL WITH A SEAL.
5. APPLY TORQ-SEAL IN ALLEN SOCKET TO FILL HOLE AFTER FLAT HD HAS BEEN ADJUSTED TO CORRECT HEIGHT AT QUALIFICATION. APPLY PN 1-23419-5 LOC-TITLE TO THREADS.

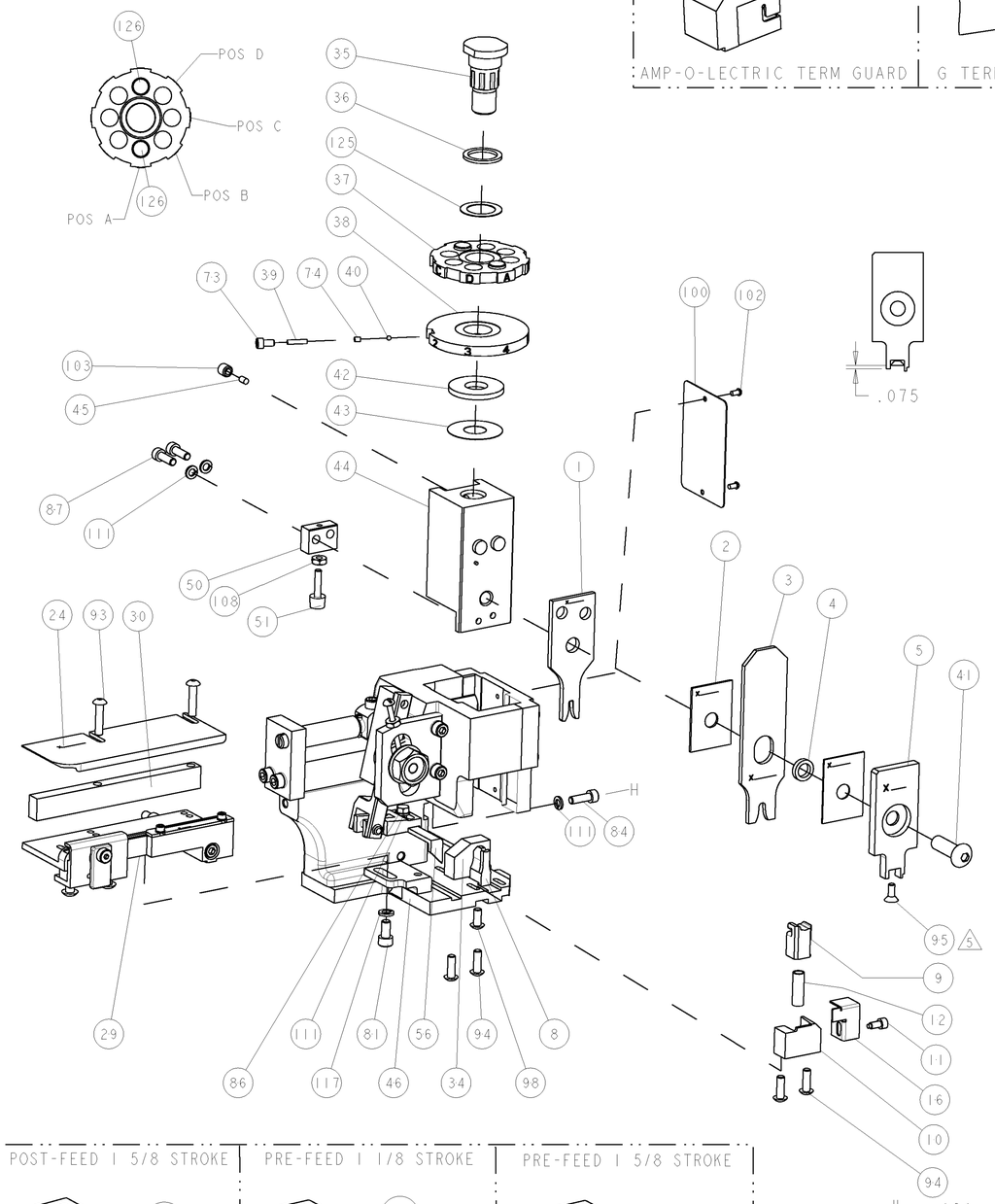

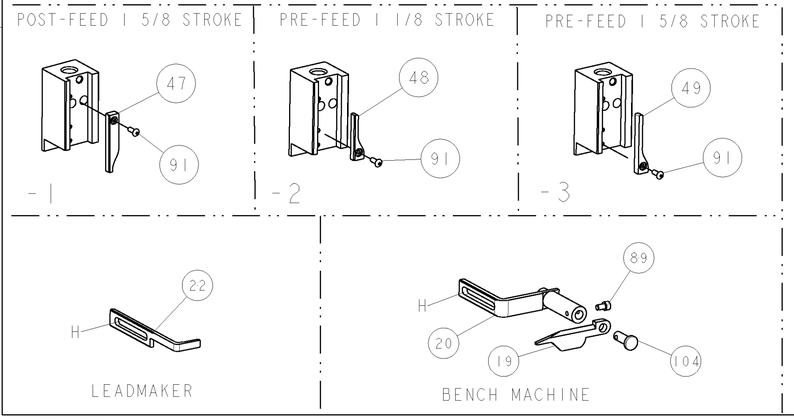

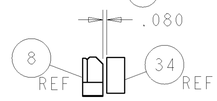

TERMINAL SUPPORT LOCATION

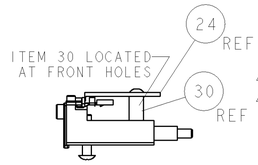

FEED TRACK POSITION

-3	-2	-1	U/M	PART NO	DESCRIPTION	ITEM NO
-	-	-	..	-	-	129
-	-	-	..	-	-	128
-	-	-	..	-	-	127
2	2	2	-	354779-2	PIN, WIRE DISC, .3000	126
1	1	1	-	986950-1	WASHER, FLAT PRECISION	125
1	1	1	-	217238-1	GENERAL INSTRUCTION PKG	124
1	1	1	-	4088040	SF APPL INST 408-8040	123
-	-	-	..	-	-	122
-	-	-	..	-	-	121
-	-	-	..	-	-	120
-	-	-	..	-	-	119
-	-	-	..	-	-	118
1	1	1	-	21024-5	WASHER, SPRG LOCK, REG NO 10	117
-	-	-	..	-	-	116
-	-	-	..	-	-	115
-	-	-	..	-	-	114
-	-	-	..	-	-	113
-	-	-	..	-	-	112
4	4	4	-	21024-4	WASHER, SPRG LOCK, REG NO 8	111
-	-	-	..	-	-	110
-	-	-	..	-	-	109
1	1	1	-	21018-5	NUT, HEX, REG 6-32	108
-	-	-	..	-	-	107
-	-	-	..	-	-	106
-	-	-	..	-	-	105
1	1	-	..	992031-1	PIN, CLEVIS	104
1	1	1	-	21009-2	SCR, SET, SELF LOCKING 1/4-20 X .250	103
2	2	2	-	21017-2	SCREW, DRIVE	102
-	-	-	..	-	-	101
1	1	1	-	461264-1	PLATE, IDENTIFICATION	100
-	-	-	..	-	-	99
1	1	1	-	22733-8	SCR, BHSC, SELF-LOCKING, 8-32 X .375	98
-	-	-	..	-	-	97
-	-	-	..	-	-	96
1	1	1	-	1-21003-9	SCR, FLT SKT HD CAP 6-32 X .375	95
4	4	4	-	2-21002-2	SCR, BTN SKT HD CAP 8-32 X .500	94
2	2	2	-	2-21002-4	SCR, BTN SKT HD CAP 8-32 X .750	93
-	-	-	..	-	-	92
1	1	1	-	1-21002-7	SCR, BTN SKT HD CAP 6-32 X .375	91
-	-	-	..	-	-	90
1	1	-	..	7-21000-9	SCR, SKT HD CAP 4-40 X .188	89
-	-	-	..	-	-	88
2	2	2	-	2-21000-7	SCR, SKT HD CAP 8-32 X .500	87
1	1	1	-	2-22603-0	SCR, HEX HD CAP 8-32 X .312	86
-	-	-	..	-	-	85
1	1	1	-	2-21000-7	SCR, SKT HD CAP 8-32 X .500	84
-	-	-	..	-	-	83
-	-	-	..	-	-	82
1	1	1	-	3-21000-4	SCR, SKT HD CAP 10-32 X .375	81
-	-	-	..	-	-	80
3 -	REF	-	..	455749-1	GUARD WINDOW	79
3 REF	-	-	..	679532-1	INSERT, GUARD	78
-	-	-	..	-	-	77
-	-	-	..	-	-	76
-	-	-	..	-	-	75
1	1	1	-	690603-1	SPRING ASSIST AMP-O-MATOR APPLICATOR	74
-3	-2	-1	U/M	PART NO	DESCRIPTION	ITEM NO

LOC	DIST
A	66

REVISIONS

P	LTR	DESCRIPTION	DATE	DWN	APVD
	A	RELEASED	13APR2005	LG	TE

-3	-2	-1	U/M	PART NO	DESCRIPTION	ITEM NO
1	1	1	-	23030-1	SCR, SKT HD CAP 6-32 x .25	73
-	-	-	..	-	-	72
-	-	-	..	-	-	71
-	-	-	..	-	-	70
-	-	-	..	-	-	69
-	-	-	..	-	-	68
-	-	-	..	-	-	67
-	-	-	..	-	-	66
-	-	-	..	-	-	65
-	-	-	..	-	-	64
-	-	-	..	-	-	63
-	-	-	..	-	-	62
-	-	-	..	-	-	61
-	-	-	..	-	-	60
-	-	-	..	-	-	59
-	-	-	..	-	-	58
-	-	-	..	-	-	57
1	1	1	-	458537-2	PAWL, FEED	56
-	-	-	..	-	-	55
-	-	-	..	-	-	54
-	-	-	..	-	-	53
-	-	-	..	-	-	52
1	1	1	-	811242-2	BUMPER, HOLD DOWN	51
1	1	1	-	690753-1	SPACER, TONKER	50
1	-	-	..	690602-6	CAM, PRE FEED, 1 5/8	49
-	1	-	..	690602-5	CAM, PRE FEED, 1 1/8	48
-	-	1	-	690501-4	CAM, POST FEED, 1 5/8	47
1	1	1	-	459456-1	APPL. BASIC SUB ASSEMBLY	46
1	1	1	-	690191-1	PLUG,NYLON	45
1	1	1	-	455673-1	RAM	44
1	1	1	-	690125-1	SHIM SUB-ASSY	43
1	1	1	-	690124-1	WASHER, RAM (.115)	42
1	1	1	-	7-21002-9	SCR, BTN SKT HD CAP 5/16-24 X 1.00	41
1	1	1	-	23241-6	BALL, STEEL	40
1	1	1	-	690170-1	SPRING, COMPRESSION	39
1	1	1	-	1-690142-0	DISC, INSULATION	38
1	1	1	-	354777-1	WIRE DISC, PLASTIC	37
1	1	1	-	22480-5	SPRING, COMPRESSION	36
1	1	1	-	690212-1	POST, RAM	35
1	1	1	-	690786-1	TERMINAL SUPPORT	34
-	-	-	..	-	-	33
-	-	-	..	-	-	32
-	-	-	..	-	-	31
1	1	1	-	1320908-8	SPACER, STRIP GUIDE	30
1	1	1	-	1633091-1	SUB-ASSEMBLY, FEEDTRACK	29
1	1	1	-	455888-6	SPACER, CRIMPER	28
-	-	-	..	-	-	27
-	-	-	..	-	-	26
-	-	-	..	-	-	25
1	1	1	-	1320928-3	PLATE, STRIP GUIDE	24
-	-	-	..	-	-	23
-	-	1	-	690472-2	STRIPPER	22
-	-	-	..	-	-	21
1	1	-	..	679218-1	STRIPPER/ WIRE STOP ASSY	20
1	1	-	..	458949-1	STRIPPER, SIDE	19
-	-	-	..	-	-	18
-	-	-	..	-	-	17
1	1	1	-	318563-1	GUARD, FRONT CHIP	16
-	-	-	..	-	-	15
-	-	-	..	-	-	14
1 -	-	-	..	-	-	13
1	1	1	-	5-22280-0	SPRING, COMPRESSION	12
1	1	1	-	690461-2	STOP, SHEAR	11
1	1	1	-	1-690459-0	SHEAR HOLDER, FRONT	10
1 1	1	1	-	318707-1	FLOATING SHEAR, FRONT	9
1 1	1	1	-	1633111-2	ANVIL, COMBINATION .100	8
-	-	-	..	-	-	7
-	-	-	..	-	-	6
1	1	1	-	318701-1	DEPRESSOR, SHEAR	5
1	1	1	-	3-2380111-3	BLOCK, CRIMPER SPACER	4
1 1	1	1	-	904741-5	CRIMPER, INSUL O PREMIUM	3
1	1	1	-	1-455888-0	SPACER, CRIMPER	2
1 1	1	1	-	456407-8	CRIMPER, WIRE PREMIUM	1

THIS DRAWING IS A CONTROLLED DOCUMENT FOR TYCO ELECTRONICS CORPORATION. IT IS SUBJECT TO CHANGE AND THE CONTROLLING ENGINEERING ORGANIZATION SHOULD BE CONTACTED FOR THE LATEST REVISION.

DIMENSIONS: INCHES

TOLERANCES UNLESS OTHERWISE SPECIFIED:
0 PLC ±-
1 PLC ±0.1
2 PLC ±0.01
3 PLC ±0.001
4 PLC ±0.0001
ANGLES ±-

MATERIAL - -
FINISH - -

DWN	L.GROSS	01APR2005
CHK	R.KNEPPER	01APR2005
APVD	T.ELBIN	01APR2005

PRODUCT SPEC -
APPLICATION SPEC -
WEIGHT -

tyco Electronics
Tyco Electronics
Harrisburg, PA 17105-3608

NAME SIDE FEED HDM APPLICATOR
-
-

SIZE	CAGE CODE	DRAWING NO	RESTRICTED TO
A1	00779	C-1852023	-

CUSTOMER DRAWING SCALE 3:5 SHEET 1 OF 1 REV A

CUSTOMER VIEWABLE ASSEMBLY

Mouser Electronics

Authorized Distributor

Click to View Pricing, Inventory, Delivery & Lifecycle Information:

TE Connectivity:

1852023-1