Film Capacitors – Power Factor Correction

PhaseCap Compact capacitors

Series/Type:	**MKK400-D-10-02**
Ordering code:	**B25673A4102A000**
Date:	January 2012
Version:	2

© EPCOS AG 2015. Reproduction, publication and dissemination of this publication, enclosures hereto and the information contained therein without EPCOS' prior express consent is prohibited.

EPCOS AG is a TDK Group Company.

Construction

- Dielectric: Polypropylene film
- Non-PCB, semi-dry biodegradable resin
- Concentric winding
- Wave cut
- Extruded round aluminium can with stud
- Provided with ceramic discharge module
- Overpressure disconnector.

Features

- Three-phase, delta connected
- Self-healing technology
- Naturally air cooled (or forced air cooling)
- Indoor mounting

Typical applications

- For Power Factor Correction

Terminals

- Optimized capacitor safety terminals

Mounting

- Threaded stud at bottom of can
  (max. torque for M12 = 10 Nm)

Technical data and specifications

Characteristics	MKK400-D-10-02	
Rated capacitance C_N	3 • 66.3 µF	
Tolerance	–5 / +10%	
Connection	D (Delta)	
Rated voltage V_N	400 V AC rms	
Rated frequency f_N	50 Hz	60 Hz
Output	10.0 kvar	12.0 kvar
Rated current I_R	14 A	17 A
tan δ_0 (dielectric)	~0.2 W / kvar	
W_N	32 Ws	
R_S	3.20 mΩ	
R_{is} • C	30000 s	
*tan δ (50 Hz)	≤ 0.4 W / kvar	

* Without discharge resistor

Maximum ratings	
V_{max} (up to 8 h daily)	440 V AC rms / 622 V peak
V_{max} (up to 1 min)	520 V AC rms / 735 V peak
I_{max}	Up to 2.0 • I_R (A) including combined effects of harmonics, overvoltages and capacitance tolerance*
I_S	400 • I_R (A)
$V_{TC\ imp}$	8000 Vpk (Standard 1.2/50 µs impulse)

*Care must be taken to ensure that the maximum permissible voltages and operating temperatures are not exceeded

Test data	
V_{TT}	900 V AC / 50 Hz for 10 s
V_{TC}	3000 V AC / 50 Hz for 10 s

Design data	
Dimensions (d x h)	85 x 162 mm
Weight approx	1.0 kg
Impregnation	Non PCB, semi-dry biodegradable resin
Fixing	Threaded bolt M12
Max. torque (Al can stud)	10 Nm
Mounting position	Any mounting position possible. See “Maintenance and Installation Manual” for further details.

Climatic category –40/60		
Θ min	–40 ºC	
Θ max	60 ºC	
Storage temperature	–40 ºC….+85 ºC	
$\Theta_{hotspot}$ Max.	85 ºC	
Maximum power loss at $\Theta_{ambient}$	P max	at $\Theta_{ambient}$
	4.0 W	55 ºC
	2.7 W	65 ºC
	1.3W	75 ºC
	0 W	85 ºC
Humidity	av. rel. < 95%	
Degree of protection	IP 20	
Maximum altitude	4,000 m	

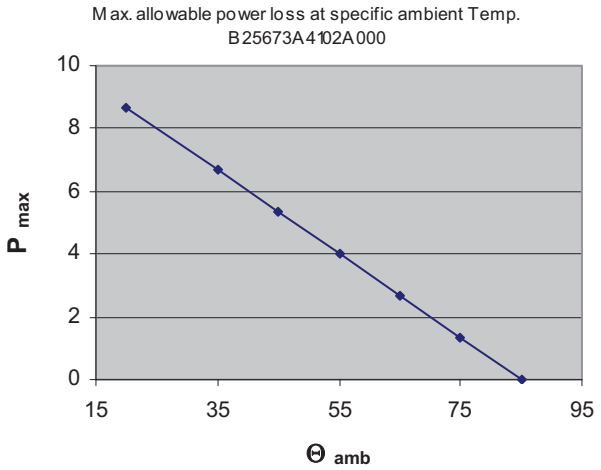

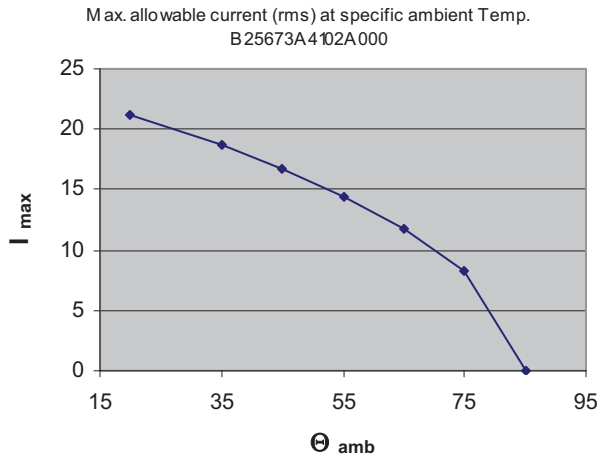

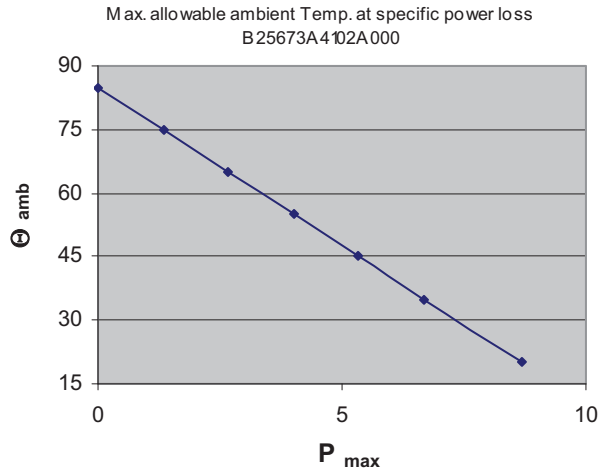

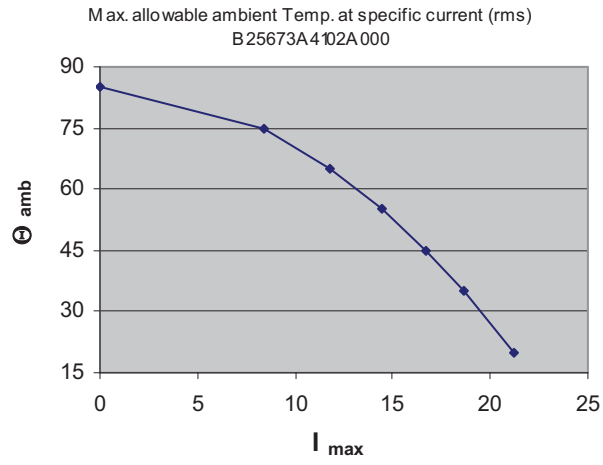

Mean life expectancy	
t_{LD}	Up to 200 000 hours (temperature class –40/C) ; $\Theta_{HS} \leq 70°C$ Up to 150 000 hours (temperature class –40/60) ; $\Theta_{HS} \leq 70°C$
Max. 10000 switchings per year	

Terminals	
Protection degree	Isolated terminals, IP20
Max. torque	1.2 Nm
Terminal cross section	16 mm^2
Maximum terminal current	50 A
Creepage distance (min)	12.7 mm
Clearance (min)	9.6 mm

Safety	
Mechanical safety	Overpressure disconnector
Max. short circuit current	(AFC: 10 kA)
Discharge resistor time	≤ 60 s to 75 V or less

Reference standards
IEC 60831–1/2, UL 810-5th edition

Label design

EPCOS
Power Quality Solutions

PhaseCap®
Compact

MKK400-D-10-02
B25673A4102A000

C_N = 3X66.3 µF +10/-5 % Δ SH

U_N	Q_N/50Hz	Q_N/60Hz
400V	10.0 kvar	12.0 kvar
380V	9.0 kvar	10.8 kvar
240V	3.6 kvar	4.3 kvar

U_i = 3/-kV -40/60

Overpressure disconnector Non PCB

IEC 60831(96) CE

Made by EPCOS 09.11

DISCHARGE CAPACITOR BEFORE HANDLING

Dimensional drawing

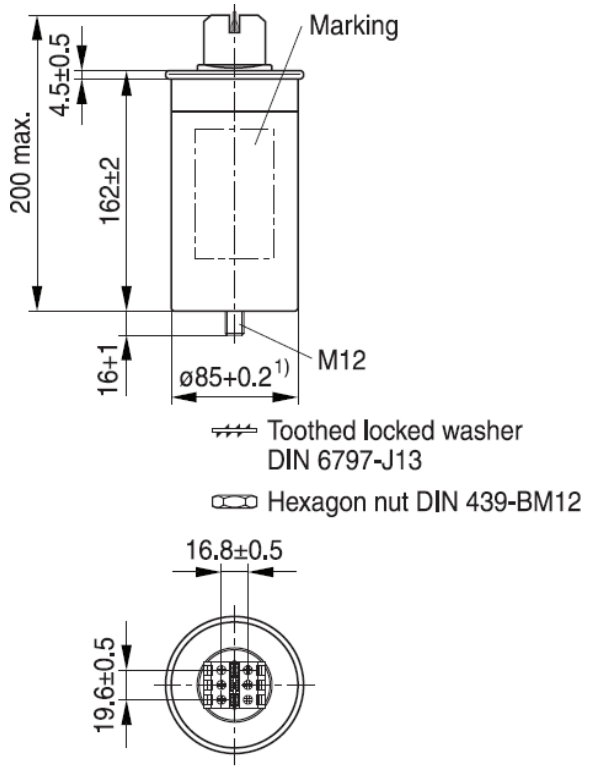

1) Seaming adds 4 mm in diameter

KLK1106-5

Cautions and warnings

- In case of dents of more than 1 mm depth or any other mechanical damage, capacitors must not be used at all.
- This applies also in cases of oil leakages.
- To ensure the full functionality of the overpressure disconnector, elastic elements must not be hindered and a minimum space of 12 mm has to be kept above each capacitor.
- Do not handle the capacitor before it is discharged.
- Resonance cases must be avoided by appropriate application design in any case.
- Handle capacitors carefully, because they may still be charged even after disconnection due to faulty discharging devices.
- Protect the capacitor properly against over current and short circuit.
- Failure to follow cautions may result, worst case, in premature failures, bursting and fire.

Discharging

Capacitors must be discharged to a maximum of 10% of rated voltage before they are switched in again. This prevents an electric impulse discharge in the application, influences the capacitor's service life and protects against electric shock. The capacitor must be discharged to 75 V or less within 3 minutes. There must be not any switch, fuse or any other disconnecting device in the circuit between the power capacitor and the discharging device. PhaseCap Compact-capacitors either have a pre-mounted ceramic discharge module inserted from above into the middle section of the terminal, or for high voltages/high loads a plastic discharge module mounted at one side of the terminal; alternatively discharge reactors are available from EPCOS. Discharge and short circuit capacitor before handling!

Service life expectancy

Electrical components do not have an unlimited service life expectancy; this applies to self-healing capacitors too. The maximum service life expectancy may vary depending on the application the capacitor is used in.

Safety

Electrical or mechanical misapplication of capacitors may be hazardous. Personal injury or property damage may result from bursting of the capacitor or from expulsion of oil or melted material due to mechanical disruption of the capacitor.

- Ensure good, effective grounding for capacitor enclosures.
- Provide means of disconnecting and insulating a faulty component/bank.
- The terminals of capacitors, connected bus bars and cables as well as other devices may also be energized.
- Follow good engineering practice.

Thermal load/over-temperature

After installation of the capacitor it is necessary to verify that maximum hot-spot temperature is not exceeded at extreme service conditions.

Overpressure disconnector

To ensure full functionality of an overpressure disconnector, the following must be observed:

1. The elastic elements must not be hindered, i.e.
   - Connecting lines must be flexible leads (cables).
   - There must be sufficient space (min. 12 mm) for expansion above the connections. This will enable a longitudinal extension of the can to secure the overpressure disconnector work.
   - Folding beads must not be retained by clamps.

2. The maximum allowed fault current of 10000 A in accordance with UL 810 standard must be assured by the application.
3. Stress parameters of the capacitor must be within the IEC60831 specification.

Overcurrent and short circuit protection

- Use HRC fuses or MCCBs for short circuit protection. Short circuit protection and connecting cables should be selected so that 1.5 times the rated capacitor current can be permanently handled.
- HRC fuses do not protect a capacitor against overload – they are only for short circuit protection.
- The HRC fuse rating should be 1.6 to 1.8 times rated capacitor current.
- Do not use HRC fuses to switch capacitors (risk of arcing).
- Use thermal magnetic over current relays for overload protection.

Resonance cases

Resonance cases must be avoided by appropriate application design in any case. Maximum total RMS capacitor current (incl. fundamental harmonic current) specified in technical data must not be exceeded.

Re-switching vs. phase-opposition

In case of voltage interruption, a sufficient discharge time has to be ensured to avoid phase-opposition and resulting high inrush currents.

Vibration resistance

The resistance to vibration of capacitors corresponds to IEC 68, part 2–6.

Max. test conditions:

Test duration	6 h*
Frequency range 1	10 ... 55 Hz*
Displacement amplitude	0.75 mm*

*corresponding to max. 98.1 m/s or 10 *g*

These figures apply to the capacitor alone. Because the fixing and the terminals may influence the vibration properties, it is necessary to check stability when a capacitor is built in and exposed to vibration. Irrespective of this, you are advised not to locate capacitors where vibration amplitude reaches the maximum in strongly vibrating equipment.

Mechanical protection

The capacitor has to be installed in a way that mechanical damages and dents in the aluminum can are avoided.

Grounding

The threaded bottom stud of the capacitor has to be used for grounding. In case grounding is done via metal chassis that the capacitor is mounted to, the layer of varnish beneath the washer and nut should be removed. The maximum tightening torque is 10 Nm.

Maintenance

- Check tightness of the connections/terminals periodically.
- Take current reading twice a year and compare with nominal current. Use a harmonic analyser or true effective RMS-meter.
- In case of current above the nominal current check your application for modifications.
- If a significant increase in the amount of non-linear loads has been detected, then a consultant has to be called in for a harmonic study.
- In case of the presence of harmonics installation of a de-tuned capacitor bank (reactors) must be considered.
- Check the discharge resistors/reactors and in case of doubt, check their function:
  (1) Power the capacitor up and down.
  (2) After ≤ 90 seconds the voltage between the terminals must decline to less than 75 V.
- Check the temperature of capacitors directly after operation for a longer period, but make sure that the capacitors have been switched off. In case of excessive temperature of individual capacitors, it is recommended to replace these capacitors, as this should be an indication for loss factor increase, which is a sign for reaching end of life.

Storage and operating conditions

Do not use or store capacitors in corrosive atmosphere, especially where chloride gas, sulfide gas, acid, alkali, salt or the like are present. In dusty environments regular maintenance and cleaning especially of the terminals is required to avoid conductive path between phases and/or phases and ground.

Note

For detailed information about PFC capacitors and cautions, refer to the latest version of EPCOS PFC Product Profile.

Important notes

The following applies to all products named in this publication:

1. Some parts of this publication contain **statements about the suitability of our products for certain areas of application**. These statements are based on our knowledge of typical requirements that are often placed on our products in the areas of application concerned. We nevertheless expressly point out **that such statements cannot be regarded as binding statements about the suitability of our products for a particular customer application.** As a rule, EPCOS is either unfamiliar with individual customer applications or less familiar with them than the customers themselves. For these reasons, it is always ultimately incumbent on the customer to check and decide whether an EPCOS product with the properties described in the product specification is suitable for use in a particular customer application.
2. We also point out that **in individual cases, a malfunction of electronic components or failure before the end of their usual service life cannot be completely ruled out in the current state of the art, even if they are operated as specified.** In customer applications requiring a very high level of operational safety and especially in customer applications in which the malfunction or failure of an electronic component could endanger human life or health (e.g. in accident prevention or life-saving systems), it must therefore be ensured by means of suitable design of the customer application or other action taken by the customer (e.g. installation of protective circuitry or redundancy) that no injury or damage is sustained by third parties in the event of malfunction or failure of an electronic component.
3. **The warnings, cautions and product-specific notes must be observed.**
4. In order to satisfy certain technical requirements, **some of the products described in this publication may contain substances subject to restrictions in certain jurisdictions (e.g. because they are classed as hazardous)**. Useful information on this will be found in our Material Data Sheets on the Internet (www.epcos.com/material). Should you have any more detailed questions, please contact our sales offices.
5. We constantly strive to improve our products. Consequently, **the products described in this publication may change from time to time**. The same is true of the corresponding product specifications. Please check therefore to what extent product descriptions and specifications contained in this publication are still applicable before or when you place an order. We also **reserve the right to discontinue production and delivery of products**. Consequently, we cannot guarantee that all products named in this publication will always be available. The aforementioned does not apply in the case of individual agreements deviating from the foregoing for customer-specific products.
6. Unless otherwise agreed in individual contracts, **all orders are subject to the current version of the "General Terms of Delivery for Products and Services in the Electrical Industry" published by the German Electrical and Electronics Industry Association (ZVEI)**.
7. The trade names EPCOS, BAOKE, Alu-X, CeraDiode, CSMP, CSSP, CTVS, DeltaCap, DigiSiMic, DSSP, MiniBlue, MiniCell, MKK, MLSC, MotorCap, PCC, PhaseCap, PhaseCube, PhaseMod, PhiCap, SIFERRIT, SIFI, SIKOREL, SilverCap, SIMDAD, SiMic, SIMID, SineFormer, SIOV, SIP5D, SIP5K, ThermoFuse, WindCap are **trademarks registered or pending** in Europe and in other countries. Further information will be found on the Internet at www.epcos.com/trademarks.

Mouser Electronics

Authorized Distributor

Click to View Pricing, Inventory, Delivery & Lifecycle Information:

EPCOS / TDK:
B25673A4102A000