MFRC531

Standard ISO/IEC 14443 A/B reader solution

Rev. 3.7 — 30 June 2015
056637

Product data sheet
COMPANY PUBLIC

1. Introduction

This data sheet describes the functionality of the MFRC531 Integrated Circuit (IC). It includes the functional and electrical specifications and from a system and hardware viewpoint gives detailed information on how to design-in the device.

Remark: The MFRC531 supports all variants of the MIFARE Mini, MIFARE 1K, MIFARE 4K, MIFARE Ultralight, MIFARE DESFire EV1 and MIFARE Plus RF identification protocols. To aid readability throughout this data sheet, the MIFARE Mini, MIFARE 1K, MIFARE 4K, MIFARE Ultralight, MIFARE DESFire EV1 and MIFARE Plus products and protocols have the generic name MIFARE.

2. General description

The MFRC531 is a highly integrated reader IC for contactless communication at 13.56 MHz. The MFRC531 reader IC provides:

- outstanding modulation and demodulation for passive contactless communication
- a wide range of methods and protocols
- a small, fully integrated package
- pin compatibility with the MFRC500, MFRC530 and SLRC400

All protocol layers of the ISO/IEC 14443 A and ISO/IEC 14443 B communication standards are supported provided:

- additional components, such as the oscillator, power supply, coil etc. are correctly applied.
- standardized protocols, such as ISO/IEC 14443-4 and/or ISO/IEC 14443 B anticollision are correctly implemented

The MFRC531 supports contactless communication using MIFARE higher baud rates (see Section 9.12 on page 38). The receiver module provides a robust and efficient demodulation/decoding circuitry implementation for compatible transponder signals (see Section 9.10 on page 32).

The digital module, manages the complete ISO/IEC 14443 standard framing and error detection (parity and CRC). In addition, it supports the fast MIFARE security algorithm for authenticating the MIFARE products (see Section 9.14 on page 40).

The internal transmitter module (Section 9.9 on page 29) can directly drive an antenna designed for a proximity operating distance up to 100 mm without any additional active circuitry.

A parallel interface can be directly connected to any 8-bit microprocessor to ensure reader/terminal design flexibility. In addition, Serial Peripheral Interface (SPI) compatibility is supported (see Section 9.1.4 on page 9).

3. Features and benefits

3.1 General

- Highly integrated analog circuitry for demodulating and decoding card/label response
- Buffered output drivers enable antenna connection using the minimum of external components
- Proximity operating distance up to 100 mm
- Supports both ISO/IEC 14443 A and ISO/IEC 14443 B standards
- Supports the MIFARE Mini, MIFARE 1K, MIFARE 4K protocols
- Contactless communication at MIFARE higher baud rates (up to 424 kBd)
- Crypto1 and secure non-volatile internal key memory
- Pin-compatible with the MFRC500, MFRC530 and the SLRC400
- Parallel microprocessor interface with internal address latch and IRQ line
- SPI compatibility
- Flexible interrupt handling
- Automatic detection of parallel microprocessor interface type
- 64-byte send and receive FIFO buffer
- Hard reset with low power function
- Software controlled Power-down mode
- Programmable timer
- Unique serial number
- User programmable start-up configuration
- Bit-oriented and byte oriented framing
- Independent power supply pins for analog, digital and transmitter modules
- Internal oscillator buffer optimized for low phase jitter enables 13.56 MHz quartz connection
- Clock frequency filtering
- 3.3 V to 5 V operation for transmitter in short range and proximity applications
- 3.3 V or 5 V operation for the digital module

All information provided in this document is subject to legal disclaimers.

© NXP Semiconductors N.V. 2015. All rights reserved.

4. Applications

- Electronic payment systems
- Identification systems
- Access control systems
- Subscriber services
- Banking systems
- Digital content systems

5. Quick reference data

Table 1. Quick reference data

Symbol	Parameter	Conditions	Min	Typ	Max	Unit
T_{amb}	ambient temperature		–40	-	+150	°C
T_{stg}	storage temperature		–40	-	+150	°C
V_{DDD}	digital supply voltage		–0.5	5	6	V
V_{DDA}	analog supply voltage		–0.5	5	6	V
$V_{DD(TVDD)}$	TVDD supply voltage		–0.5	5	6	V
$\|V_i\|$	input voltage (absolute value)	on any digital pin to DVSS	–0.5	-	V_{DDD} + 0.5	V
		on pin RX to AVSS	–0.5	-	V_{DDA} + 0.5	V
I_{LI}	input leakage current		–1.0	-	–1.0	mA
$I_{DD(TVDD)}$	TVDD supply current	continuous wave	-	-	150	mA

6. Ordering information

Table 2. Ordering information

Type number	Package		
	Name	Description	Version
MFRC53101T/0FE	SO32	plastic small outline package; 32 leads; body width 7.5 mm	SOT287-1

All information provided in this document is subject to legal disclaimers.

© NXP Semiconductors N.V. 2015. All rights reserved.

7. Block diagram

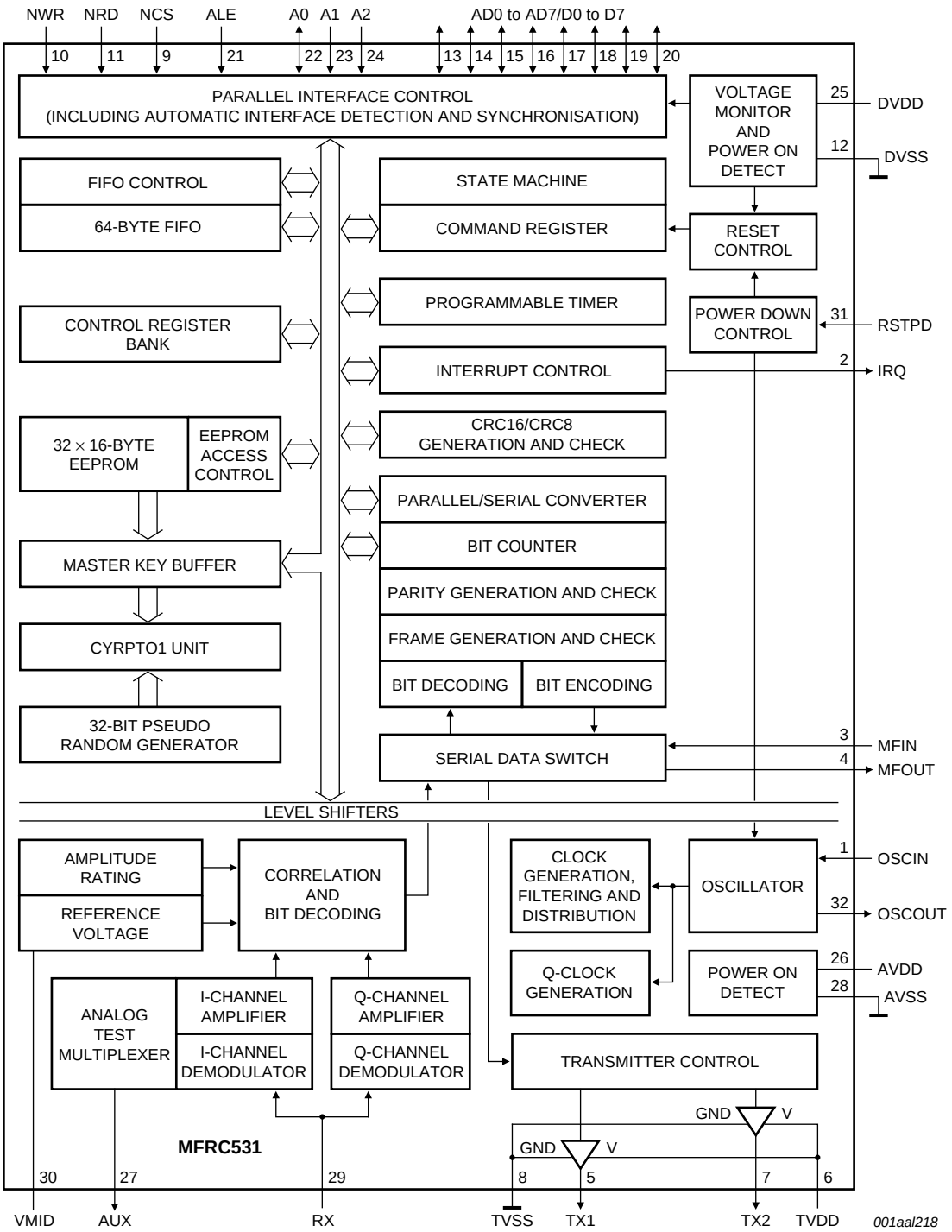

Fig 1. MFRC531 block diagram

All information provided in this document is subject to legal disclaimers.

© NXP Semiconductors N.V. 2015. All rights reserved.

8. Pinning information

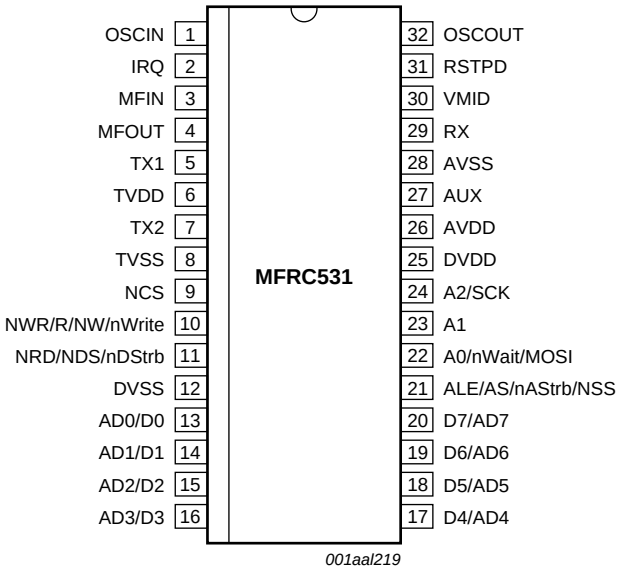

Fig 2. MFRC531 pin configuration

8.1 Pin description

Table 3. Pin description

Pin	Symbol	Type[1]	Description
1	OSCIN	I	oscillator/clock inputs: crystal oscillator input to the oscillator's inverting amplifier externally generated clock input; f_{osc} = 13.56 MHz
2	IRQ	O	interrupt request generates an output signaling an interrupt event
3	MFIN	I	ISO/IEC 14443 A MIFARE serial data interface input
4[2]	MFOUT	O	ISO/IEC 14443 A MIFARE serial data interface output
5	TX1	O	transmitter 1 modulated carrier output; 13.56 MHz
6	TVDD	P	transmitter power supply for the TX1 and TX2 output stages
7	TX2	O	transmitter 2 modulated carrier output; 13.56 MHz
8	TVSS	G	transmitter ground for the TX1 and TX2 output stages
9	NCS	I	not chip select input: selects and activates the microprocessor interface
10[3]	NWR	I	not write input: generates the strobe signal for writing data to the registers when applied to pins D0 to D7
	R/NW	I	read not write input: switches between read or write cycles
	nWrite	I	not write input: selects the read or write cycle to be performed
11[3]	NRD	I	not read input: generates the strobe signal for reading data from the registers when applied to pins D0 to D7
	NDS	I	not data strobe input: generates the strobe signal for the read and write cycles
	nDStrb	I	not data strobe input: generates the strobe signal for the read and write cycles
12	DVSS	G	digital ground

All information provided in this document is subject to legal disclaimers.

© NXP Semiconductors N.V. 2015. All rights reserved.

Table 3. Pin description *...continued*

Pin	Symbol	Type[1]	Description
13	D0	O	SPI master in, slave out output
13 to 20[3]	D0 to D7	I/O	8-bit bidirectional data bus input/output on pins D0 to D7
	AD0 to AD7	I/O	8-bit bidirectional address and data bus input/output on pins AD0 to AD7
21[3]	ALE	I	address latch enable input for pins AD0 to AD5; HIGH latches the internal address
	AS	I	address strobe input for pins AD0 to AD5; HIGH latches the internal address
	nAStrb	I	not address strobe input for pins AD0 to AD5; LOW latches the internal address
	NSS	I	not slave select strobe input for SPI communication
22[3]	A0	I	address line 0 is the address register bit 0 input
	nWait	O	not wait output: LOW starts an access cycle HIGH ends an access cycle
	MOSI	I	SPI master out, slave in
23	A1	I	address line 1 is the address register bit 1 input
24[3]	A2	I	address line 2 is the address register bit 2 input
	SCK	I	SPI serial clock input
25	DVDD	P	digital power supply
26	AVDD	P	analog power supply for pins OSCIN, OSCOUT, RX, VMID and AUX
27	AUX	O	auxiliary output is used to generate analog test signals. The output signal is selected using the TestAnaSelect register's TestAnaOutSel[4:0] bits
28	AVSS	G	analog ground
29	RX	I	receiver input: used as the card response input. The carrier is load modulated at 13.56 MHz, drawn from the antenna circuit
30	VMID	P	internal reference voltage pin provides the internal reference voltage as a supply **Remark:** It must be connected to a 100 nF block capacitor connected between pin VMID and ground
31	RSTPD	I	reset and power-down input: HIGH: the internal current sinks are switched off, the oscillator is inhibited and the input pads are disconnected LOW (negative edge): start internal reset phase
32	OSCOUT	O	crystal oscillator output for the oscillator's inverting amplifier

[1] Pin types: I = Input, O = Output, I/O = Input/Output, P = Power and G = Ground.

[2] The SLRC400 uses pin name SIGOUT for pin MFOUT. The MFRC531 functionality includes test functions for the SLRC400 using pin MFOUT.

[3] These pins provide different functionality depending on the selected microprocessor interface type (see Section 9.1 on page 7 for detailed information).

All information provided in this document is subject to legal disclaimers.

© NXP Semiconductors N.V. 2015. All rights reserved.

9. Functional description

9.1 Digital interface

9.1.1 Overview of supported microprocessor interfaces

The MFRC531 supports direct interfacing to various 8-bit microprocessors. Alternatively, the MFRC531 can be connected to a PC's Enhanced Parallel Port (EPP). Table 4 shows the parallel interface signals supported by the MFRC531.

Table 4. Supported microprocessor and EPP interface signals

Bus control signals	Bus	Separated address and data bus	Multiplexed address and data bus
Separated read and write strobes	control	NRD, NWR, NCS	NRD, NWR, NCS, ALE
	address	A0, A1, A2	AD0, AD1, AD2, AD3, AD4, AD5
	data	D0 to D7	AD0 to AD7
Common read and write strobe	control	R/NW, NDS, NCS	R/NW, NDS, NCS, AS
	address	A0, A1, A2	AD0, AD1, AD2, AD3, AD4, AD5
	data	D0 to D7	AD0 to AD7
Common read and write strobe with handshake (EPP)	control	-	nWrite, nDStrb, nAStrb, nWait
	address	-	AD0, AD1, AD2, AD3, AD4, AD5
	data	-	AD0 to AD7

9.1.2 Automatic microprocessor interface detection

After a Power-On or Hard reset, the MFRC531 resets parallel microprocessor interface mode and detects the microprocessor interface type.

The MFRC531 identifies the microprocessor interface using the logic levels on the control pins. This is performed using a combination of fixed pin connections and the dedicated Initialization routine (see Section 9.7.4 on page 28).

All information provided in this document is subject to legal disclaimers.

© NXP Semiconductors N.V. 2015. All rights reserved.

9.1.3 Connection to different microprocessor types

The connection to various microprocessor types is shown in Table 5.

Table 5. Connection scheme for detecting the parallel interface type

MFRC531 pins	Parallel interface type and signals				
	Separated read/write strobe		Common read/write strobe		
	Dedicated address bus	Multiplexed address bus	Dedicated address bus	Multiplexed address bus	Multiplexed address bus with handshake
ALE	HIGH	ALE	HIGH	AS	nAStrb
A2	A2	LOW	A2	LOW	HIGH
A1	A1	HIGH	A1	HIGH	HIGH
A0	A0	HIGH	A0	LOW	nWait
NRD	NRD	NRD	NDS	NDS	nDStrb
NWR	NWR	NWR	R/NW	R/NW	nWrite
NCS	NCS	NCS	NCS	NCS	LOW
D7 to D0	D7 to D0	AD7 to AD0	D7 to D0	AD7 to AD0	AD7 to AD0

9.1.3.1 Separate read and write strobe

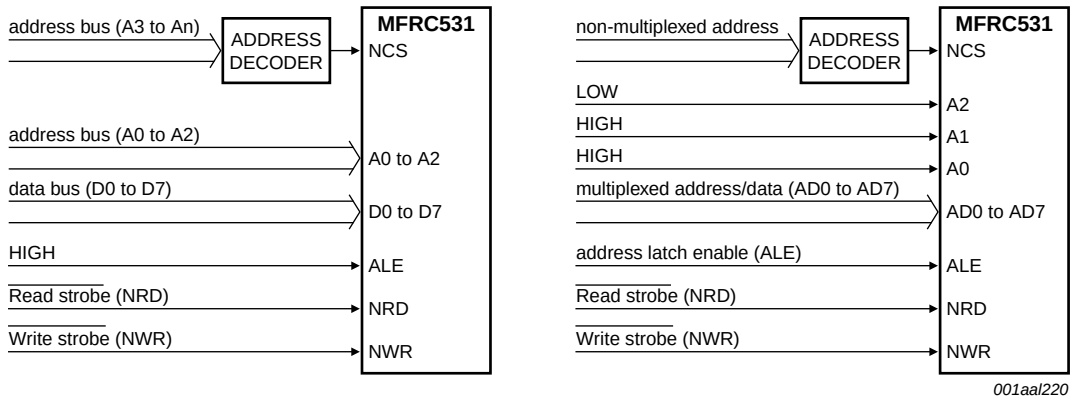

Fig 3. Connection to microprocessor: separate read and write strobes

Refer to Section 13.4.1 on page 93 for timing specification.

All information provided in this document is subject to legal disclaimers.

© NXP Semiconductors N.V. 2015. All rights reserved.

9.1.3.2 Common read and write strobe

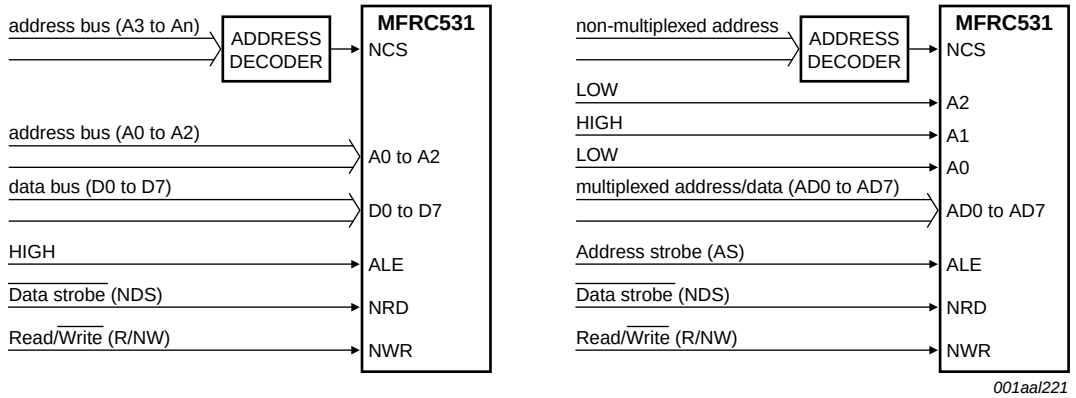

Fig 4. Connection to microprocessor: common read and write strobes

Refer to Section 13.4.2 on page 94 for timing specification.

9.1.3.3 Common read and write strobe: EPP with handshake

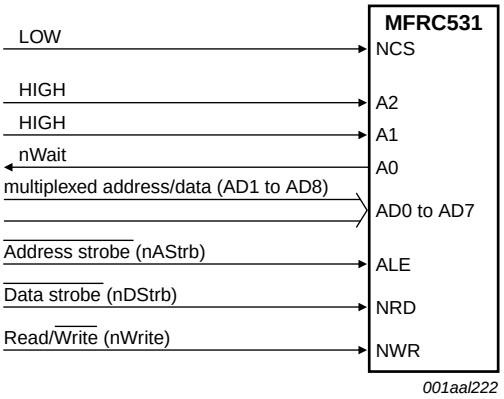

Fig 5. Connection to microprocessor: EPP common read/write strobes and handshake

Refer to Section 13.4.3 on page 95 for timing specification.

Remark: In the EPP standard, a chip select signal is not defined. To cover this situation, the status of the NCS pin can be used to inhibit the nDStrb signal. If this inhibitor is not used, it is mandatory that pin NCS is connected to pin DVSS.

Remark: After each Power-On or Hard reset, the nWait signal on pin A0 is high-impedance. nWait is defined as the first negative edge applied to the nAStrb pin after the reset phase. The MFRC531 does not support the Read Address Cycle.

9.1.4 Serial Peripheral Interface

The MFRC531 provides compatibility with the 5-wire Serial Peripheral Interface (SPI) standard and acts as a slave during SPI communication. The SPI clock signal SCK must be generated by the master. Data communication from the master to the slave uses the MOSI line. The MISO line sends data from the MFRC531 to the master.

All information provided in this document is subject to legal disclaimers.

© NXP Semiconductors N.V. 2015. All rights reserved.

Table 6. SPI compatibility

MFRC531 pins	SPI pins
ALE	NSS
A2	SCK
A1	LOW
A0	MOSI
NRD	HIGH
NWR	HIGH
NCS	LOW
D7 to D1	do not connect
D0	MISO

Figure 6 shows the microprocessor connection to the MFRC531 using SPI.

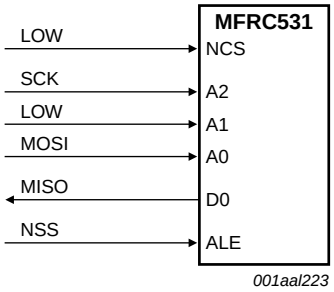

Fig 6. Connection to microprocessor: SPI

Remark: The SPI implementation for MFRC531 conforms to the SPI standard and ensures that the MFRC531 can only be addressed as a slave.

9.1.4.1 SPI read data

The structure shown in Table 7 must be used to read data using SPI. It is possible to read up to n-data bytes. The first byte sent defines both, the mode and the address.

Table 7. SPI read data

Pin	Byte 0	Byte 1	Byte 2	...	Byte n	Byte n + 1
MOSI	address 0	address 1	address 2	...	address n	00
MISO	XX	data 0	data 1	...	data n – 1	data n

The address byte must meet the following criteria:

- the Most Significant Bit (MSB) of the first byte sets the mode. To read data from the MFRC531 the MSB is set to logic 1
- bits [6:1] define the address
- the Least Significant Bit (LSB) should be set to logic 0.

As shown in Table 8, all the bits of the last byte sent are set to logic 0.

All information provided in this document is subject to legal disclaimers.

© NXP Semiconductors N.V. 2015. All rights reserved.

Table 8. SPI read address

Address (MOSI)	Bit 7 (MSB)	Bit 6	Bit 5	Bit 4	Bit 3	Bit 2	Bit 1	Bit 0 (LSB)
byte 0	1	address	address	address	address	address	address	reserved
byte 1 to byte n	reserved	address	address	address	address	address	address	reserved
byte n + 1	0	0	0	0	0	0	0	0

[1] All reserved bits must be set to logic 0.

9.1.4.2 SPI write data

The structure shown in Table 9 must be used to write data using SPI. It is possible to write up to n-data bytes. The first byte sent defines both the mode and the address.

Table 9. SPI write data

	Byte 0	Byte 1	Byte 2	...	Byte n	Byte n + 1
MOSI	address	data 0	data 1	...	data n – 1	data n
MISO	XX	XX	XX	...	XX	XX

The address byte must meet the following criteria:

- the MSB of the first byte sets the mode. To write data to the MFRC531, the MSB is set to logic 0
- bits [6:1] define the address
- the LSB should be set to logic 0.

SPI write mode writes all data to the address defined in byte 0 enabling effective write cycles to the FIFO buffer.

Table 10. SPI write address

Address line (MOSI)	Bit 7 (MSB)	Bit 6	Bit 5	Bit 4	Bit 3	Bit 2	Bit 1	Bit 0 (LSB)
byte 0	0	address	address	address	address	address	address	reserved
byte 1 to byte n + 1	data	data	data	data	data	data	data	data

[1] All reserved bits must be set to logic 0.

Remark: The data bus pins D7 to D1 must be disconnected.

Refer to Section 13.4.4 on page 97 for the timing specification.

All information provided in this document is subject to legal disclaimers.

© NXP Semiconductors N.V. 2015. All rights reserved.

9.2 Memory organization of the EEPROM

Table 11. EEPROM memory organization diagram

Block		Byte address	Access	Memory content	Refer to
Position	Address				
0	0	00h to 0Fh	R	product information field	Section 9.2.1 on page 13
1	1	10h to 1Fh	R/W	StartUp register initialization file	Section 9.2.2.1 on page 14
2	2	20h to 2Fh	R/W		
3	3	30h to 3Fh	R/W	register initialization file user data or second initialization	Section 9.2.2.3 “Register initialization file (read/write)” on page 16
4	4	40h to 4Fh	R/W		
5	5	50h to 5Fh	R/W		
6	6	60h to 6Fh	R/W		
7	7	70h to 7Fh	R/W		
8	8	80h to 8Fh	W	keys for Crypto1	Section 9.2.3 on page 16
9	9	90h to 9Fh	W		
10	A	A0h to AFh	W		
11	B	B0h to BFh	W		
12	C	C0h to CFh	W		
13	D	D0h to DFh	W		
14	E	E0h to EFh	W		
15	F	F0h to FFh	W		
16	10	100h to 10Fh	W		
17	11	110h to 11Fh	W		
18	12	120h to 12Fh	W		
19	13	130h to 13Fh	W		
20	14	140h to 14Fh	W		
21	15	150h to 15Fh	W		
22	16	160h to 16Fh	W		
23	17	170h to 17Fh	W		
24	18	180h to 18Fh	W		
25	19	190h to 19Fh	W		
26	1A	1A0h to 1AFh	W		
27	1B	1B0h to 1BFh	W		
28	1C	1C0h to 1CFh	W		
29	1D	1D0h to 1DFh	W		
30	1E	1E0h to 1EFh	W		
31	1F	1F0h to 1FFh	W		

All information provided in this document is subject to legal disclaimers.

© NXP Semiconductors N.V. 2015. All rights reserved.

9.2.1 Product information field (read only)

Table 12. Product information field

Byte	Symbol	Access	Value	Description
15	CRC	R	-	the content of the product information field is secured using a CRC byte which is checked during start-up
14	RsMaxP	R	-	maximum source resistance for the p-channel driver transistor on pins TX1 and TX2 The source resistance of the p-channel driver transistors of pin TX1 and TX2 can be adjusted using the value GsCfgCW[5:0] in the CwConductance register (see Section 9.9.3 on page 30). The mean value of the maximum adjustable source resistance for pins TX1 and TX2 is stored as an integer value in Ω in this byte. Typical values for RsMaxP are between 60 Ω to 140 Ω. This value is denoted as maximum adjustable source resistance $R_{S(ref)maxP}$ and is measured by setting the CwConductance register's GsCfgCW[5:0] bits to 01h.
13 to 12	Internal	R	-	two bytes for internal trimming parameters
11 to 8	Product Serial Number	R	-	a unique four byte serial number for the device
7 to 5	reserved	R	-	
4 to 0	Product Type Identification	R	-	the MFRC531 is a member of a new family of highly integrated reader ICs. Each member of the product family has a unique product type identification. The value of the product type identification is shown in Table 13.

Table 13. Product type identification definition

Definition	Product type identification bytes				
Byte	0	1	2	3	4[1]
Value	30h	CCh	FFh	0Fh	XXh

[1] Byte 4 contains the current version number.

9.2.2 Register initialization files (read/write)

Register initialization from address 10h to address 2Fh is performed automatically during the initializing phase (see Section 9.7.3 on page 28) using the StartUp register initialization file.

In addition, the MFRC531 registers can be initialized using values from the register initialization file when the LoadConfig command is executed (see Section 11.4.1 on page 86).

All information provided in this document is subject to legal disclaimers.

© NXP Semiconductors N.V. 2015. All rights reserved.

Remark: The following points apply to initialization:

- the Page register (addressed using 10h, 18h, 20h, 28h) is skipped and not initialized.
- make sure that all PreSetxx registers are not changed.
- make sure that all register bits that are reserved are set to logic 0.

9.2.2.1 StartUp register initialization file (read/write)

The EEPROM memory block address 1 and 2 contents are used to automatically set the register subaddresses 10h to 2Fh during the initialization phase. The default values stored in the EEPROM during production are shown in Section 9.2.2.2 “Factory default StartUp register initialization file”.

The byte assignment is shown in Table 14.

Table 14. Byte assignment for register initialization at start-up

EEPROM byte address	Register address	Remark
10h (block 1, byte 0)	10h	skipped
11h	11h	copied
…	…	…
2Fh (block 2, byte 15)	2Fh	copied

9.2.2.2 Factory default StartUp register initialization file

During the production tests, the StartUp register initialization file is initialized using the default values shown in Table 15. During each power-up and initialization phase, these values are written to the MFRC531’s registers.

All information provided in this document is subject to legal disclaimers.

© NXP Semiconductors N.V. 2015. All rights reserved.

Table 15. Shipment content of StartUp configuration file

EEPROM byte address	Register address	Value	Symbol	Description
10h	10h	00h	Page	free for user
11h	11h	58h	TxControl	transmitter pins TX1 and TX2 are switched off, bridge driver configuration, modulator driven from internal digital circuitry
12h	12h	3Fh	CwConductance	source resistance of TX1 and TX2 is set to minimum
13h	13h	3Fh	ModConductance	defines the output conductance
14h	14h	19h	CoderControl	ISO/IEC 14443 A coding is set
15h	15h	13h	ModWidth	pulse width for Miller pulse coding is set to standard configuration
16h	16h	3Fh	ModWidthSOF	pulse width of Start Of Frame (SOF)
17h	17h	3Bh	TypeFraming	ISO/IEC 14443 A framing is set
18h	18h	00h	Page	free for user
19h	19h	73h	RxControl1	ISO/IEC 14443 A is set and internal amplifier gain is maximum
1Ah	1Ah	08h	DecoderControl	bit-collisions always evaluate to HIGH in the data bit stream
1Bh	1Bh	ADh	BitPhase	BitPhase[7:0] is set to standard configuration
1Ch	1Ch	FFh	RxThreshold	MinLevel[3:0] and CollLevel[3:0] are set to maximum
1Dh	1Dh	1Eh	BPSKDemControl	ISO/IEC 14443 A is set
1Eh	1Eh	41h	RxControl2	use Q-clock for the receiver, automatic receiver off is switched on, decoder is driven from internal analog circuitry
1Fh	1Fh	00h	ClockQControl	automatic Q-clock calibration is switched on
20h	20h	00h	Page	free for user
21h	21h	06h	RxWait	frame guard time is set to six bit-clocks
22h	22h	03h	ChannelRedundancy	channel redundancy is set using ISO/IEC 14443 A
23h	23h	63h	CRCPresetLSB	CRC preset value is set using ISO/IEC 14443 A
24h	24h	63h	CRCPresetMSB	CRC preset value is set using ISO/IEC 14443 A
25h	25h	00h	PreSet25	
26h	26h	00h	MFOUTSelect	pin MFOUT is set LOW
27h	27h	00h	PreSet27	-
28h	28h	00h	Page	free for user
29h	29h	08h	FIFOLevel	WaterLevel[5:0] FIFO buffer warning level is set to standard configuration
2Ah	2Ah	07h	TimerClock	TPreScaler[4:0] is set to standard configuration, timer unit restart function is switched off
2Bh	2Bh	06h	TimerControl	Timer is started at the end of transmission, stopped at the beginning of reception
2Ch	2Ch	0Ah	TimerReload	TReloadValue[7:0]: the timer unit preset value is set to standard configuration
2Dh	2Dh	02h	IRQPinConfig	pin IRQ is set to high-impedance
2Eh	2Eh	00h	PreSet2E	-
2Fh	2Fh	00h	PreSet2F	-

All information provided in this document is subject to legal disclaimers.

© NXP Semiconductors N.V. 2015. All rights reserved.

9.2.2.3 Register initialization file (read/write)

The EEPROM memory content from block address 3 to 7 can initialize register sub addresses 10h to 2Fh when the LoadConfig command is executed (see Section 11.4.1 on page 86). This command requires the EEPROM starting byte address as a two byte argument for the initialization procedure.

The byte assignment is shown in Table 16.

Table 16. Byte assignment for register initialization at startup

EEPROM byte address	Register address	Remark
EEPROM starting byte address	10h	skipped
EEPROM + 1 starting byte address	11h	copied
...	…	…
EEPROM + 31 starting byte address	2Fh	copied

The register initialization file is large enough to hold values for two initialization sets and up to one block (16-byte) of user data.

Remark: The register initialization file can be read/written by users and these bytes can be used to store other user data.

After each power-up, the default configuration enables the MIFARE and ISO/IEC 14443 A protocol.

9.2.3 Crypto1 keys (write only)

MIFARE security requires specific cryptographic keys to encrypt data stream communication on the contactless interface. These keys are called Crypto1 keys.

9.2.3.1 Key format

Keys stored in the EEPROM are written in a specific format. Each key byte must be split into lower four bits k0 to k3 (lower nibble) and the higher four bits k4 to k7 (higher nibble). Each nibble is stored twice in one byte and one of the two nibbles is bit-wise inverted. This format is a precondition for successful execution of the LoadKeyE2 (see Section 11.6.1 on page 88) and LoadKey commands (see Section 11.6.2 on page 88).

Using this format, 12 bytes of EEPROM memory are needed to store a 6-byte key. This is shown in Figure 7.

Master key byte	0 (LSB)		1		//	5 (MSB)	
Master key bits	$\overline{k7\ k6\ k5\ k4}$ k7 k6 k5 k4	$\overline{k3\ k2\ k1\ k0}$ k3 k2 k1 k0	$\overline{k7\ k6\ k5\ k4}$ k7 k6 k5 k4	$\overline{k3\ k2\ k1\ k0}$ k3 k2 k1 k0	//	$\overline{k7\ k6\ k5\ k4}$ k7 k6 k5 k4	$\overline{k3\ k2\ k1\ k0}$ k3 k2 k1 k0
EEPROM byte address	n	n + 1	n + 2	n + 3	//	n + 10	n + 11
Example	5Ah	F0h	5Ah	E1h	//	5Ah	A5h

001aak640

Fig 7. Key storage format

Example: The value for the key must be written to the EEPROM.

- If the key was: A0h A1h A2h A3h A4h A5h then:
- 5Ah F0h 5Ah E1h 5Ah D2h 5Ah C3h 5Ah B4h 5Ah A5h would be written.

All information provided in this document is subject to legal disclaimers.

© NXP Semiconductors N.V. 2015. All rights reserved.

Remark: It is possible to load data for other key formats into the EEPROM key storage location. However, it is not possible to validate card authentication with data which will cause the LoadKeyE2 command (see Section 11.6.1 on page 88) to fail.

9.2.3.2 Storage of keys in the EEPROM

The MFRC531 reserves 384 bytes of memory in the EEPROM for the Crypto1 keys. No memory segmentation is used to mirror the 12-byte structure of key storage. Thus, every byte of the dedicated memory area can be the start of a key.

Example: If the key loading cycle starts at the last byte address of an EEPROM block, (for example, key byte 0 is stored at 12Fh), the next bytes are stored in the next EEPROM block, for example, key byte 1 is stored at 130h, byte 2 at 131h up to byte 11 at 13Ah.

Based on the 384 bytes of memory and a single key needing 12 bytes, then up to 32 different keys can be stored in the EEPROM.

Remark: It is not possible to load a key exceeding the EEPROM byte location 1FFh.

9.3 FIFO buffer

An 8 × 64 bit FIFO buffer is used in the MFRC531 to act as a parallel-to-parallel converter. It buffers both the input and output data streams between the microprocessor and the internal circuitry of the MFRC531. This makes it possible to manage data streams up to 64 bytes long without needing to take timing constraints into account.

9.3.1 Accessing the FIFO buffer

9.3.1.1 Access rules

The FIFO buffer input and output data bus is connected to the FIFOData register. Writing to this register stores one byte in the FIFO buffer and increments the FIFO buffer write pointer. Reading from this register shows the FIFO buffer contents stored at the FIFO buffer read pointer and increments the FIFO buffer read pointer. The distance between the write and read pointer can be obtained by reading the FIFOLength register.

When the microprocessor starts a command, the MFRC531 can still access the FIFO buffer while the command is running. Only one FIFO buffer has been implemented which is used for input and output. Therefore, the microprocessor must ensure that there are no inadvertent FIFO buffer accesses. Table 17 gives an overview of FIFO buffer access during command processing.

Table 17. FIFO buffer access

Active command	FIFO buffer		Remark
	µp Write	µp Read	
StartUp	-	-	
Idle	-	-	
Transmit	yes	-	
Receive	-	yes	
Transceive	yes	yes	the microprocessor has to know the state of the command (transmitting or receiving)
WriteE2	yes	-	

All information provided in this document is subject to legal disclaimers.

© NXP Semiconductors N.V. 2015. All rights reserved.

Table 17. FIFO buffer access *...continued*

Active command	FIFO buffer		Remark
	µp Write	µp Read	
ReadE2	yes	yes	the microprocessor has to prepare the arguments, afterwards only reading is allowed
LoadKeyE2	yes	-	
LoadKey	yes	-	
Authent1	yes	-	
Authent2	-	-	
LoadConfig	yes	-	
CalcCRC	yes	-	

9.3.2 Controlling the FIFO buffer

In addition to writing to and reading from the FIFO buffer, the FIFO buffer pointers can be reset using the FlushFIFO bit. This changes the FIFOLength[6:0] value to zero, bit FIFOOvfl is cleared and the stored bytes are no longer accessible. This enables the FIFO buffer to be written with another 64 bytes of data.

9.3.3 FIFO buffer status information

The microprocessor can get the following FIFO buffer status data:

- the number of bytes stored in the FIFO buffer: bits FIFOLength[6:0]
- the FIFO buffer full warning: bit HiAlert
- the FIFO buffer empty warning: bit LoAlert
- the FIFO buffer overflow warning: bit FIFOOvfl.

Remark: Setting the FlushFIFO bit clears the FIFOOvfl bit.

The MFRC531 can generate an interrupt signal when:

- bit LoAlertIRq is set to logic 1 and bit LoAlert = logic 1, pin IRQ is activated.
- bit HiAlertIRq is set to logic 1 and bit HiAlert = logic 1, pin IRQ activated.

The HiAlert flag bit is set to logic 1 only when the WaterLevel[5:0] bits or less can be stored in the FIFO buffer. The trigger is generated by Equation 1:

$$HiAlert = (64 - FIFOLength) \leq WaterLevel \quad (1)$$

The LoAlert flag bit is set to logic 1 when the FIFOLevel register's WaterLevel[5:0] bits or less are stored in the FIFO buffer. The trigger is generated by Equation 2:

$$LoAlert = FIFOLength \leq WaterLevel \quad (2)$$

All information provided in this document is subject to legal disclaimers.

© NXP Semiconductors N.V. 2015. All rights reserved.

9.3.4 FIFO buffer registers and flags

Table 17 shows the related FIFO buffer flags in alphabetic order.

Table 18. Associated FIFO buffer registers and flags

Flags	Register name	Bit	Register address
FIFOLength[6:0]	FIFOLength	6 to 0	04h
FIFOOvfl	ErrorFlag	4	0Ah
FlushFIFO	Control	0	09h
HiAlert	PrimaryStatus	1	03h
HiAlertIEn	InterruptEn	1	06h
HiAlertIRq	InterruptRq	1	07h
LoAlert	PrimaryStatus	0	03h
LoAlertIEn	InterruptEn	0	06h
LoAlertIRq	InterruptRq	0	07h
WaterLevel[5:0]	FIFOLevel	5 to 0	29h

9.4 Interrupt request system

The MFRC531 indicates interrupt events by setting the PrimaryStatus register bit IRq (see Section 10.5.1.4 “PrimaryStatus register” on page 49) and activating pin IRQ. The signal on pin IRQ can be used to interrupt the microprocessor using its interrupt handling capabilities ensuring efficient microprocessor software.

9.4.1 Interrupt sources overview

Table 19 shows the integrated interrupt flags, related source and setting condition. The interrupt TimerIRq flag bit indicates an interrupt set by the timer unit. Bit TimerIRq is set when the timer decrements from one down to zero (bit TAutoRestart disabled) or from one to the TReLoadValue[7:0] with bit TAutoRestart enabled.

Bit TxIRq indicates interrupts from different sources and is set as follows:

- the transmitter automatically sets the bit TxIRq interrupt when it is active and its state changes from sending data to transmitting the end of frame pattern
- the CRC coprocessor sets the bit TxIRq after all data from the FIFO buffer has been processed indicated by bit CRCReady = logic 1
- when EEPROM programming is finished, the bit TxIRq is set and is indicated by bit E2Ready = logic 1

The RxIRq flag bit indicates an interrupt when the end of the received data is detected. The IdleIRq flag bit is set when a command finishes and the content of the Command register changes to Idle.

When the FIFO buffer reaches the HIGH-level indicated by the WaterLevel[5:0] value (see Section 9.3.3 on page 18) and bit HiAlert = logic 1, then the HiAlertIRq flag bit is set to logic 1.

When the FIFO buffer reaches the LOW-level indicated by the WaterLevel[5:0] value (see Section 9.3.3 on page 18) and bit LoAlert = logic 1, then LoAlertIRq flag bit is set to logic 1.

All information provided in this document is subject to legal disclaimers.

© NXP Semiconductors N.V. 2015. All rights reserved.

Table 19. Interrupt sources

Interrupt flag	Interrupt source	Trigger action
TimerIRq	timer unit	timer counts from 1 to 0
TxIRq	transmitter	a data stream, transmitted to the card, ends
	CRC coprocessor	all data from the FIFO buffer has been processed
	EEPROM	all data from the FIFO buffer has been programmed
RxIRq	receiver	a data stream, received from the card, ends
IdleIRq	Command register	command execution finishes
HiAlertIRq	FIFO buffer	FIFO buffer is full
LoAlertIRq	FIFO buffer	FIFO buffer is empty

9.4.2 Interrupt request handling

9.4.2.1 Controlling interrupts and getting their status

The MFRC531 informs the microprocessor about the interrupt request source by setting the relevant bit in the InterruptRq register. The relevance of each interrupt request bit as source for an interrupt can be masked by the InterruptEn register interrupt enable bits.

Table 20. Interrupt control registers

Register	Bit 7	Bit 6	Bit 5	Bit 4	Bit 3	Bit 2	Bit 1	Bit 0
InterruptEn	SetIEn	reserved	TimerIEn	TxIEn	RxIEn	IdleIEn	HiAlertIEn	LoAlertIEn
InterruptRq	SetIRq	reserved	TimerIRq	TxIRq	RxIRq	IdleIRq	HiAlertIRq	LoAlertIRq

If any interrupt request flag is set to logic 1 (showing that an interrupt request is pending) and the corresponding interrupt enable flag is set, the PrimaryStatus register IRq flag bit is set to logic 1. Different interrupt sources can activate simultaneously because all interrupt request bits are OR'ed, coupled to the IRq flag and then forwarded to pin IRQ.

9.4.2.2 Accessing the interrupt registers

The interrupt request bits are automatically set by the MFRC531's internal state machines. In addition, the microprocessor can also set or clear the interrupt request bits as required.

A special implementation of the InterruptRq and InterruptEn registers enables changing an individual bit status without influencing any other bits. If an interrupt register is set to logic 1, bit SetIxx and the specific bit must both be set to logic 1 at the same time. If a specific interrupt flag is cleared, zero must be written to the SetIxx and the interrupt register address must be set to logic 1 at the same time.

If a content bit is not changed during the setting or clearing phase, zero must be written to the specific bit location.

Example: Writing 3Fh to the InterruptRq register clears all bits. SetIRq is set to logic 0 while all other bits are set to logic 1. Writing 81h to the InterruptRq register sets LoAlertIRq to logic 1 and leaves all other bits unchanged.

All information provided in this document is subject to legal disclaimers.

© NXP Semiconductors N.V. 2015. All rights reserved.

9.4.3 Configuration of pin IRQ

The logic level of the IRq flag bit is visible on pin IRQ. The signal on pin IRQ can also be controlled using the following IRQPinConfig register bits.

- bit IRQInv: the signal on pin IRQ is equal to the logic level of bit IRq when this bit is set to logic 0. When set to logic 1, the signal on pin IRQ is inverted with respect to bit IRq.
- bit IRQPushPull: when set to logic 1, pin IRQ has CMOS output characteristics. When it is set to logic 0, it is an open-drain output which requires an external resistor to achieve a HIGH-level at pin IRQ.

Remark: During the reset phase (see Section 9.7.2 on page 28) bit IRQInv is set to logic 1 and bit IRQPushPull is set to logic 0. This results in a high-impedance on pin IRQ.

9.4.4 Register overview interrupt request system

Table 21 shows the related interrupt request system flags in alphabetical order.

Table 21. Associated Interrupt request system registers and flags

Flags	Register name	Bit	Register address
HiAlertIEn	InterruptEn	1	06h
HiAlertIRq	InterruptRq	1	07h
IdleIEn	InterruptEn	2	06h
IdleIRq	InterruptRq	2	07h
IRq	PrimaryStatus	3	03h
IRQInv	IRQPinConfig	1	07h
IRQPushPull	IRQPinConfig	0	07h
LoAlertIEn	InterruptEn	0	06h
LoAlertIRq	InterruptRq	0	07h
RxIEn	InterruptEn	3	06h
RxIRq	InterruptRq	3	07h
SetIEn	InterruptEn	7	06h
SetIRq	InterruptRq	7	07h
TimerIEn	InterruptEn	5	06h
TimerIRq	InterruptRq	5	07h
TxIEn	InterruptEn	4	06h
TxIRq	InterruptRq	4	07h

All information provided in this document is subject to legal disclaimers.

© NXP Semiconductors N.V. 2015. All rights reserved.

9.5 Timer unit

The timer derives its clock signal from the 13.56 MHz on-board chip clock. The microprocessor can use this timer to manage timing-relevant tasks.

The timer unit can be used in one of the following configurations:

- Timeout counter
- WatchDog counter
- Stopwatch
- Programmable one shot
- Periodical trigger

The timer unit can be used to measure the time interval between two events or to indicate that a specific timed event occurred. The timer is triggered by events but does not influence any event (e.g. a time-out during data receiving does not automatically influence the receiving process). Several timer related flags can be set and these flags can be used to generate an interrupt.

All information provided in this document is subject to legal disclaimers.

© NXP Semiconductors N.V. 2015. All rights reserved.

9.5.1 Timer unit implementation

9.5.1.1 Timer unit block diagram

Figure 8 shows the block diagram of the timer module.

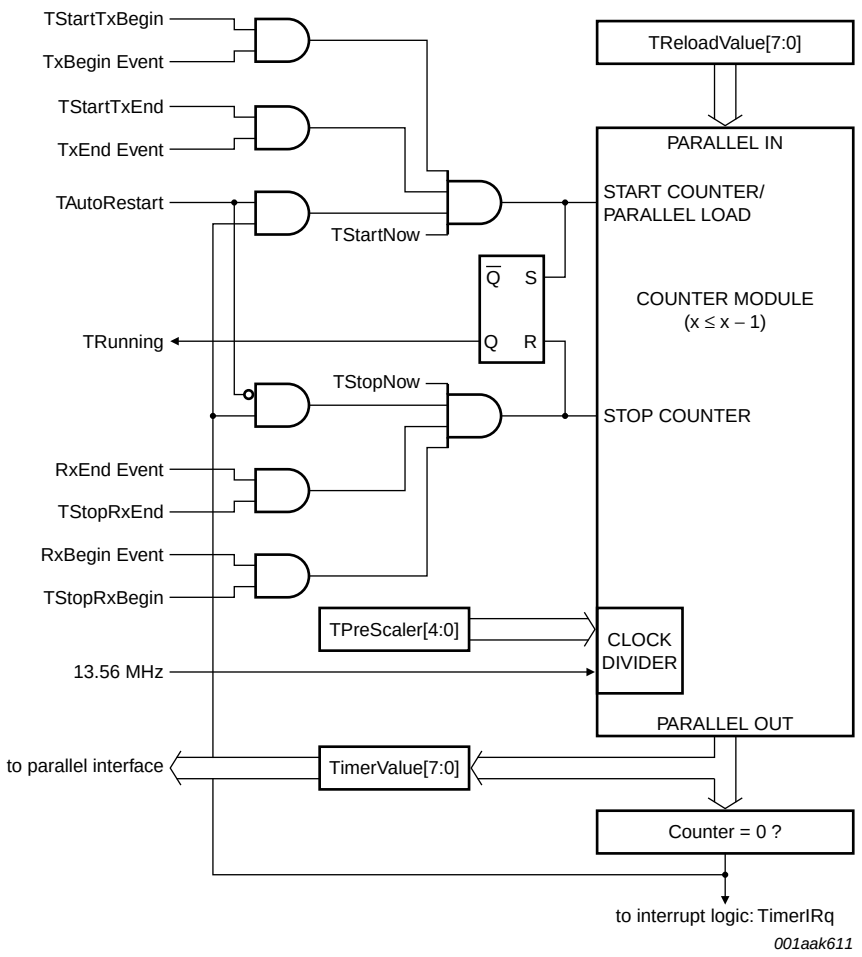

Fig 8. Timer module block diagram

The timer unit is designed, so that events when combined with enabling flags start or stop the counter. For example, setting bit TStartTxBegin = logic 1 enables control of received data with the timer unit. In addition, the first received bit is indicated by the TxBegin event. This combination starts the counter at the defined TReloadValue[7:0].

The timer stops automatically when the counter value is equal to zero or if a defined stop event happens.

9.5.1.2 Controlling the timer unit

The main part of the timer unit is a down-counter. As long as the down-counter value is not zero, it decrements its value with each timer clock cycle.

If the TAutoRestart flag is enabled, the timer does not decrement down to zero. On reaching value 1, the timer reloads the next clock function with the TReloadValue[7:0].

All information provided in this document is subject to legal disclaimers.

© NXP Semiconductors N.V. 2015. All rights reserved.

The timer is started immediately by loading a value from the TimerReload register into the counter module.

This is activated by one of the following events:

- transmission of the first bit to the card (TxBegin event) with bit TStartTxBegin = logic 1
- transmission of the last bit to the card (TxEnd event) with bit TStartTxEnd = logic 1
- bit TStartNow is set to logic 1 by the microprocessor

Remark: Every start event reloads the timer from the TimerReload register. Thus, the timer unit is re-triggered.

The timer can be configured to stop on one of the following events:

- receipt of the first valid bit from the card (RxBegin event) with bit TStopRxBegin = logic 1
- receipt of the last bit from the card (RxEnd event) with bit TStopRxEnd = logic 1
- the counter module has decremented down to zero and bit TAutoRestart = logic 0
- bit TStopNow is set to logic 1 by the microprocessor.

Loading a new value, e.g. zero, into the TimerReload register or changing the timer unit while it is counting will not immediately influence the counter. This is because this register only affects the counter content after a start event.

If the counter is stopped when bit TStopNow is set, no TimerIRq is flagged.

9.5.1.3 Timer unit clock and period

The timer unit clock is derived from the 13.56 MHz on-board chip clock using the programmable divider. Clock selection is made using the TimerClock register TPreScaler[4:0] bits based on Equation 3:

$$f_{TimerClock} = \frac{1}{T_{TimerClock}} = \frac{2^{TPreScaler}}{13.56}[MHz] \quad (3)$$

The values for the TPreScaler[4:0] bits are between 0 and 21 which results in a minimum periodic time ($T_{TimerClock}$) of between 74 ns and 150 ms.

The time period elapsed since the last start event is calculated using Equation 4:

$$t_{Timer} = \frac{TReLoadValue - TimerValue}{f_{TimerClock}}[s] \quad (4)$$

This results in a minimum time period (t_{Timer}) of between 74 ns and 40 s.

9.5.1.4 Timer unit status

The SecondaryStatus register's TRunning bit shows the timer's status. Configured start events start the timer at the TReloadValue[7:0] and changes the status flag TRunning to logic 1. Conversely, configured stop events stop the timer and set the TRunning status flag to logic 0. As long as status flag TRunning is set to logic 1, the TimerValue register changes on the next timer unit clock cycle.

The TimerValue[7:0] bits can be read directly from the TimerValue register.

All information provided in this document is subject to legal disclaimers.

© NXP Semiconductors N.V. 2015. All rights reserved.

9.5.2 Using the timer unit functions

9.5.2.1 Time-out and WatchDog counters

After starting the timer using TReloadValue[7:0], the timer unit decrements the TimerValue register beginning with a given start event. If a given stop event occurs, such as a bit being received from the card, the timer unit stops without generating an interrupt.

If a stop event does not occur, such as the card not answering within the expected time, the timer unit decrements down to zero and generates a timer interrupt request. This signals to the microprocessor the expected event has not occurred within the given time (t_{Timer}).

9.5.2.2 Stopwatch

The time (t_{Timer}) between a start and stop event is measured by the microprocessor using the timer unit. Setting the TReloadValue register triggers the timer which in turn, starts to decrement. If the defined stop event occurs, the timer stops. The time between start and stop is calculated by the microprocessor using Equation 5, when the timer does not decrement down to zero.

$$\Delta t = (TReLoad_{value} - TimerValue) \times t_{Timer} \quad (5)$$

9.5.2.3 Programmable one shot timer and periodic trigger

Programmable one shot timer: The microprocessor starts the timer unit and waits for the timer interrupt. The interrupt occurs after the time specified by t_{Timer}.

Periodic trigger: If the microprocessor sets the TAutoRestart bit, it generates an interrupt request after every t_{Timer} cycle.

9.5.3 Timer unit registers

Table 22 shows the related flags of the timer unit in alphabetical order.

Table 22. Associated timer unit registers and flags

Flags	Register name	Bit	Register address
TAutoRestart	TimerClock	5	2Ah
TimerValue[7:0]	TimerValue	7 to 0	0Ch
TReloadValue[7:0]	TimerReload	7 to 0	2Ch
TPreScaler[4:0]	TimerClock	4 to 0	2Ah
TRunning	SecondaryStatus	7	05h
TStartNow	Control	1	09h
TStartTxBegin	TimerControl	0	2Bh
TStartTxEnd	TimerControl	1	2Bh
TStopNow	Control	2	09h
TStopRxBegin	TimerControl	2	2Bh
TStopRxEnd	TimerControl	3	2Bh

All information provided in this document is subject to legal disclaimers.

© NXP Semiconductors N.V. 2015. All rights reserved.

9.6 Power reduction modes

9.6.1 Hard power-down

Hard power-down is enabled when pin RSTPD is HIGH. This turns off all internal current sinks including the oscillator. All digital input buffers are separated from the input pads and defined internally (except pin RSTPD itself). The output pins are frozen at a given value. The status of all pins during a hard power-down is shown in Table 23.

Table 23. Signal on pins during Hard power-down

Symbol	Pin	Type	Description
OSCIN	1	I	not separated from input, pulled to AVSS
IRQ	2	O	high-impedance
MFIN	3	I	separated from input
MFOUT	4	O	LOW
TX1	5	O	HIGH, if bit TX1RFEn = logic 1
			LOW, if bit TX1RFEn = logic 0
TX2	7	O	HIGH, only if bit TX2RFEn = logic 1 and bit TX2Inv = logic 0
			otherwise LOW
NCS	9	I	separated from input
NWR	10	I	separated from input
NRD	11	I	separated from input
D0 to D7	13 to 20	I/O	separated from input
ALE	21	I	separated from input
A0	22	I/O	separated from input
A1	23	I	separated from input
A2	24	I	separated from input
AUX	27	O	high-impedance
RX	29	I	not changed
VMID	30	A	pulled to V_{DDA}
RSTPD	31	I	not changed
OSCOUT	32	O	HIGH

9.6.2 Soft power-down mode

Soft power-down mode is entered immediately using the Control register bit PowerDown. All internal current sinks, including the oscillator buffer, are switched off. The digital input buffers are not separated from the input pads and keep their functionality. In addition, the digital output pins do not change their state.

After resetting the Control register bit PowerDown, the bit indicating Soft power-down mode is only cleared after 512 clock cycles. Resetting it does not immediately clear it. The PowerDown bit is automatically cleared when the Soft power-down mode is exited.

Remark: When the internal oscillator is used, time (t_{osc}) is required for the oscillator to become stable. This is because the internal oscillator is supplied by V_{DDA} and any clock cycles will not be detected by the internal logic until V_{DDA} is stable.

All information provided in this document is subject to legal disclaimers.

© NXP Semiconductors N.V. 2015. All rights reserved.

9.6.3 Standby mode

The Standby mode is immediately entered when the Control register StandBy bit is set. All internal current sinks, including the internal digital clock buffer are switched off. However, the oscillator buffer is not switched off.

The digital input buffers are not separated by the input pads, keeping their functionality and the digital output pins do not change their state. In addition, the oscillator does not need time to wake-up.

After resetting the Control register StandBy bit, it takes four clock cycles on pin OSCIN for Standby mode to exit. Resetting bit StandBy does not immediately clear it. It is automatically cleared when the Standby mode is exited.

9.6.4 Automatic receiver power-down

It is a power saving feature to switch off the receiver circuit when it is not needed. Setting bit RxAutoPD = logic 1, automatically powers down the receiver when it is not in use. Setting bit RxAutoPD = logic 0, keeps the receiver continuously powered up.

9.7 StartUp phase

The events executed during the StartUp phase are shown in Figure 9.

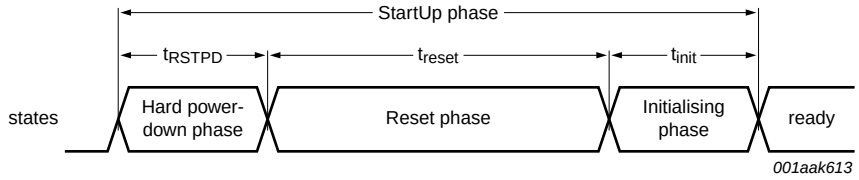

Fig 9. The StartUp procedure

9.7.1 Hard power-down phase

The hard power-down phase is active during the following cases:

- a Power-On Reset (POR) caused by power-up on pins DVDD or AVDD activated when V_{DDD} or V_{DDA} is below the digital reset threshold.
- a HIGH-level on pin RSTPD which is active while pin RSTPD is HIGH. The HIGH level period on pin RSTPD must be at least 100 μs ($t_{PD} \geq 100$ μs). Shorter phases will not necessarily result in the reset phase (t_{reset}). The rising or falling edge slew rate on pin RSTPD is not critical because pin RSTPD is a Schmitt trigger input.

Remark: In case two, HIGH level on pin RSTPD, has to be at least 100 μs long ($t_{PD} \geq 100$ μs). Shorter phases will not necessarily result in the reset phase t_{reset}. The slew rate of rising/falling edge on pin RSTPD is not critical because pin RSTPD is a Schmitt trigger input.

All information provided in this document is subject to legal disclaimers.

© NXP Semiconductors N.V. 2015. All rights reserved.

9.7.2 Reset phase

The reset phase automatically follows the Hard power-down. Once the oscillator is running stably, the reset phase takes 512 clock cycles. During the reset phase, some register bits are preset by hardware. The respective reset values are given in the description of each register (see Section 10.5 on page 48).

Remark: When the internal oscillator is used, time (t_{osc}) is required for the oscillator to become stable. This is because the internal oscillator is supplied by V_{DDA} and any clock cycles will not be detected by the internal logic until V_{DDA} is stable.

9.7.3 Initialization phase

The initialization phase automatically follows the reset phase and takes 128 clock cycles. During the initializing phase the content of the EEPROM blocks 1 and 2 is copied into the register subaddresses 10h to 2Fh (see Section 9.2.2 on page 13).

Remark: During the production test, the MFRC531 is initialized with default configuration values. This reduces the microprocessor's configuration time to a minimum.

9.7.4 Initializing the parallel interface type

A different initialization sequence is used for each microprocessor. This enables detection of the correct microprocessor interface type and synchronization of the microprocessor's and the MFRC531's start-up. See Section 9.1.3 on page 8 for detailed information on the different connections for each microprocessor interface type.

During StartUp phase, the command value is set to 3Fh once the oscillator attains clock frequency stability at an amplitude of > 90 % of the nominal 13.56 MHz clock frequency. At the end of the initialization phase, the MFRC531 automatically switches to idle and the command value changes to 00h.

To ensure correct detection of the microprocessor interface, the following sequence is executed:

- the Command register is read until the 6-bit register value is 00h. On reading the 00h value, the internal initialization phase is complete and the MFRC531 is ready to be controlled
- write 80h to the Page register to initialize the microprocessor interface
- read the Command register. If it returns a value of 00h, the microprocessor interface was successfully initialized
- write 00h to the Page registers to activate linear addressing mode.

All information provided in this document is subject to legal disclaimers.

© NXP Semiconductors N.V. 2015. All rights reserved.

9.8 Oscillator circuit

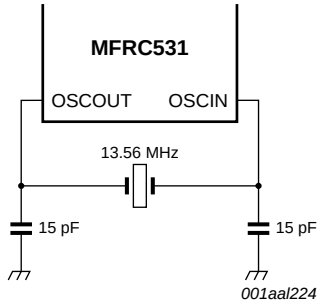

Fig 10. Quartz clock connection

The clock applied to the MFRC531 acts as a time basis for the synchronous system encoder and decoder. The stability of the clock frequency is an important factor for correct operation. To obtain highest performance, clock jitter must be as small as possible. This is best achieved by using the internal oscillator buffer with the recommended circuitry.

If an external clock source is used, the clock signal must be applied to pin OSCIN. In this case, be very careful in optimizing clock duty cycle and clock jitter. Ensure the clock quality has been verified. It must meet the specifications described in Section 13.4.5 on page 97.

Remark: We do not recommend using an external clock source.

9.9 Transmitter pins TX1 and TX2

The signal on pins TX1 and TX2 is the 13.56 MHz energy carrier modulated by an envelope signal. It can be used to drive an antenna directly, using minimal passive components for matching and filtering (see Section 15.1 on page 98). To enable this, the output circuitry is designed with a very low-impedance source resistance. The TxControl register is used to control the TX1 and TX2 signals.

9.9.1 Configuring pins TX1 and TX2

TX1 pin configurations are described in Table 24.

Table 24. Pin TX1 configurations

TxControl register configuration		Envelope	TX1 signal
TX1RFEn	FORCE100ASK		
0	X	X	LOW (GND)
1	0	0	13.56 MHz carrier frequency modulated
1	0	1	13.56 MHz carrier frequency
1	1	0	LOW
1	1	1	13.56 MHz energy carrier

TX2 pin configurations are described in Table 25.

All information provided in this document is subject to legal disclaimers.

© NXP Semiconductors N.V. 2015. All rights reserved.

Table 25. Pin TX2 configurations

TxControl register configuration				Envelope	TX2 signal
TX2RFEn	FORCE100ASK	TX2CW	TX2Inv		
0	X	X	X	X	LOW
1	0	0	0	0	13.56 MHz carrier frequency modulated
1	0	0	0	1	13.56 MHz carrier frequency
1	0	0	1	0	13.56 MHz carrier frequency modulated, 180° phase-shift relative to TX1
1	0	0	1	1	13.56 MHz carrier frequency, 180° phase-shift relative to TX1
1	0	1	0	X	13.56 MHz carrier frequency
1	0	1	1	X	13.56 MHz carrier frequency, 180° phase-shift relative to TX1
1	1	0	0	0	LOW
1	1	0	0	1	13.56 MHz carrier frequency
1	1	0	1	0	HIGH
1	1	0	1	1	13.56 MHz carrier frequency, 180° phase-shift relative to TX1
1	1	1	0	X	13.56 MHz carrier frequency
1	1	1	1	X	13.56 MHz carrier frequency, 180° phase-shift relative to TX1

9.9.2 Antenna operating distance versus power consumption

Using different antenna matching circuits (by varying the supply voltage on the antenna driver supply pin TVDD), it is possible to find the trade-off between maximum effective operating distance and power consumption. Different antenna matching circuits are described in the Application note *"MIFARE Design of MFRC500 Matching Circuit and Antennas"*.

9.9.3 Antenna driver output source resistance

The output source conductance of pins TX1 and TX2 can be adjusted between 1 Ω and 100 Ω using the CwConductance register GsCfgCW[5:0] bits.

The output source conductance of pins TX1 and TX2 during the modulation phase can be adjusted between 1 Ω and 100 Ω using the ModConductance register GsCfgMod[5:0] bits.

The values are relative to the reference resistance ($R_{S(ref)}$) which is measured during the production test and stored in the MFRC531 EEPROM. It can be read from the product information field (see Section 9.2.1 on page 13). The electrical specification can be found in Section 13.3.3 on page 92.

All information provided in this document is subject to legal disclaimers.

© NXP Semiconductors N.V. 2015. All rights reserved.

9.9.3.1 Source resistance table

Table 26. TX1 and TX2 source resistance of n-channel driver transistor against GsCfgCW or GsCfgMod

MANT = Mantissa; EXP = Exponent.

GsCfgCW, GsCfgMod (decimal)	$EXP_{GsCfgCW}$, $EXP_{GsCfgMod}$ (decimal)	$MANT_{GsCfgCW}$, $MANT_{GsCfgMod}$ (decimal)	$R_{S(ref)}$ (Ω)	GsCfgCW, GsCfgMod (decimal)	$EXP_{GsCfgCW}$, $EXP_{GsCfgMod}$ (decimal)	$MANT_{GsCfgCW}$, $MANT_{GsCfgMod}$ (decimal)	$R_{S(ref)}$ (Ω)
0	0	0	-	24	1	8	0.0652
16	1	0	-	25	1	9	0.0580
32	2	0	-	37	2	5	0.0541
48	3	0	-	26	1	10	0.0522
1	0	1	1.0000	27	1	11	0.0474
17	1	1	0.5217	51	3	3	0.0467
2	0	2	0.5000	38	2	6	0.0450
3	0	3	0.3333	28	1	12	0.0435
33	2	1	0.2703	29	1	13	0.0401
18	1	2	0.2609	39	2	7	0.0386
4	0	4	0.2500	30	1	14	0.0373
5	0	5	0.2000	52	3	4	0.0350
19	1	3	0.1739	31	1	15	0.0348
6	0	6	0.1667	40	2	8	0.0338
7	0	7	0.1429	41	2	9	0.0300
49	3	1	0.1402	53	3	5	0.0280
34	2	2	0.1351	42	2	10	0.0270
20	1	4	0.1304	43	2	11	0.0246
8	0	8	0.1250	54	3	6	0.0234
9	0	9	0.1111	44	2	12	0.0225
21	1	5	0.1043	45	2	13	0.0208
10	0	10	0.1000	55	3	7	0.0200
11	0	11	0.0909	46	2	14	0.0193
35	2	3	0.0901	47	2	15	0.0180
22	1	6	0.0870	56	3	8	0.0175
12	0	12	0.0833	57	3	9	0.0156
13	0	13	0.0769	58	3	10	0.0140
23	1	7	0.0745	59	3	11	0.0127
14	0	14	0.0714	60	3	12	0.0117
50	3	2	0.0701	61	3	13	0.0108
36	2	4	0.0676	62	3	14	0.0100
15	0	15	0.0667	63	3	15	0.0093

All information provided in this document is subject to legal disclaimers.

© NXP Semiconductors N.V. 2015. All rights reserved.

9.9.3.2 Calculating the relative source resistance

The reference source resistance $R_{S(ref)}$ can be calculated using Equation 6.

$$R_{S(ref)} = \frac{1}{MANT_{GsCfgCW} \bullet \left(\frac{77}{40}\right)^{EXP_{GsCfgCW}}} \quad (6)$$

The reference source resistance ($R_{S(ref)}$) during the modulation phase can be calculated using ModConductance register's GsCfgMod[5:0].

9.9.3.3 Calculating the effective source resistance

Wiring resistance ($R_{S(wire)}$): Wiring and bonding add a constant offset to the driver resistance that is relevant when pins TX1 and TX2 are switched to low-impedance. The additional resistance for pin TX1 ($R_{S(wire)TX1}$) can be set approximately as shown in Equation 7.

$$R_{S(wire)TX1} \approx 500\ m\Omega \quad (7)$$

Effective resistance (R_{Sx}): The source resistances of the driver transistors (RsMaxP byte) read from the Product Information Field (see Section 9.2.1 on page 13) are measured during the production test with CwConductance register's GsCfgCW[5:0] = 01h.

To calculate the driver resistance for a specific value set in GsCfgMod[5:0], use Equation 8.

$$R_{Sx} = (R_{S(ref)maxP} - R_{S(wire)TX1}) \bullet R_{S(rel)} + R_{S(wire)TX1} \quad (8)$$

9.9.4 Pulse width

The envelope carries the data signal information that is transmitted to the card. It is an encoded data signal based on the Miller code. In addition, each pause of the Miller encoded signal is again encoded as a pulse of a fixed width. The width of the pulse is adjusted using the ModWidth register. The pulse width (t_w) is calculated using Equation 9 where the frequency constant (f_{clk}) = 13.56 MHz.

$$t_w = 2\frac{ModWidth + 1}{f_c} \quad (9)$$

9.10 Receiver circuitry

The MFRC531 uses an integrated quadrature demodulation circuit enabling it to detect an ISO/IEC 14443 A or ISO/IEC 14443 B compliant subcarrier signal on pin RX.

- **ISO/IEC 14443 A subcarrier signal:** defined as a Manchester coded ASK modulated signal
- **ISO/IEC 14443 B subcarrier signal:** defined as an NRZ-L coded BPSK modulated ISO/IEC 14443 B subcarrier signal

All information provided in this document is subject to legal disclaimers.

© NXP Semiconductors N.V. 2015. All rights reserved.

The quadrature demodulator uses two different clocks (Q-clock and I-clock) with a phase-shift of 90° between them. Both resulting subcarrier signals are amplified, filtered and forwarded to the correlation circuitry. The correlation results are evaluated, digitized and then passed to the digital circuitry. Various adjustments can be made to obtain optimum performance for all processing units.

9.10.1 Receiver circuit block diagram

Figure 11 shows the block diagram of the receiver circuit. The receiving process can be broken down in to several steps. Quadrature demodulation of the 13.56 MHz carrier signal is performed. To achieve the optimum performance, automatic Q-clock calibration is recommended (see Section 9.10.2.1 on page 33).

The demodulated signal is amplified by an adjustable amplifier. A correlation circuit calculates the degree of similarity between the expected and the received signal. The BitPhase register enables correlation interval position alignment with the received signal's bit grid. In the evaluation and digitizer circuitry, the valid bits are detected and the digital results are sent to the FIFO buffer. Several tuning steps are possible for this circuit.

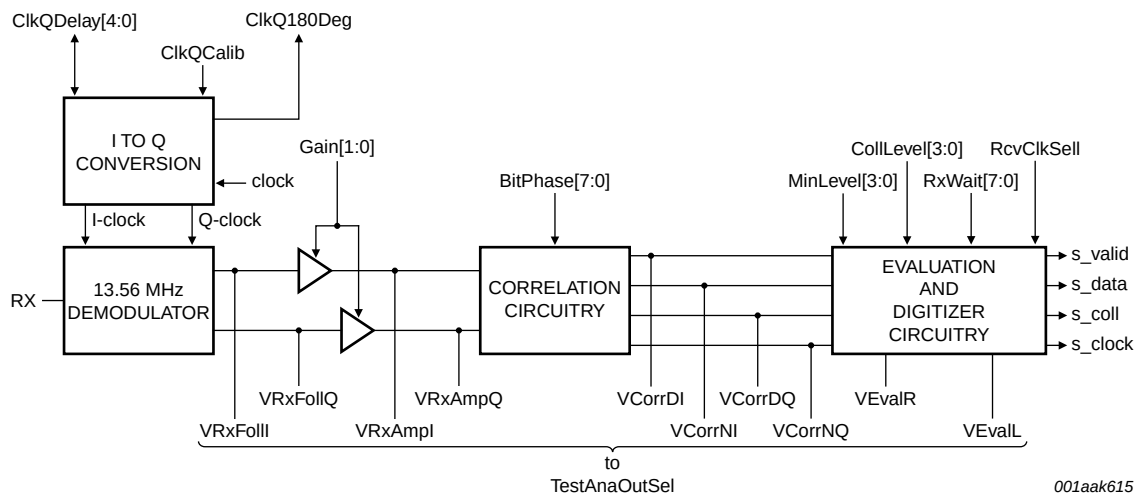

Fig 11. Receiver circuit block diagram

The signal can be observed on its way through the receiver as shown in Figure 11. One signal at a time can be routed to pin AUX using the TestAnaSelect register as described in Section 15.2.2 on page 103.

9.10.2 Receiver operation

In general, the default settings programmed in the StartUp initialization file are suitable for device to MIFARE card data communication. However, in some environments specific user settings will achieve better performance.

9.10.2.1 Automatic Q-clock calibration

The quadrature demodulation concept of the receiver generates a phase signal (I-clock) and a 90° phase-shifted quadrature signal (Q-clock). To achieve the optimum demodulator performance, the Q-clock and the I-clock must be phase-shifted by 90°. After the reset phase, a calibration procedure is automatically performed.

All information provided in this document is subject to legal disclaimers.

© NXP Semiconductors N.V. 2015. All rights reserved.

Automatic calibration can be set-up to execute at the end of each Transceive command if bit ClkQCalib = logic 0. Setting bit ClkQCalib = logic 1 disables all automatic calibrations except after the reset sequence. Automatic calibration can also be triggered by the software when bit ClkQCalib has a logic 0 to logic 1 transition.

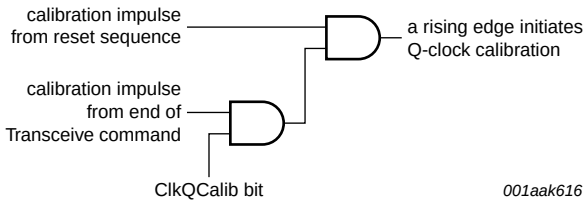

Fig 12. Automatic Q-clock calibration

Remark: The duration of the automatic Q-clock calibration is 65 oscillator periods or approximately 4.8 μs.

The ClockQControl register's ClkQDelay[4:0] value is proportional to the phase-shift between the Q-clock and the I-clock. The ClkQ180Deg status flag bit is set when the phase-shift between the Q-clock and the I-clock is greater than 180°.

Remark:

- The StartUp configuration file enables automatic Q-clock calibration after a reset
- If bit ClkQCalib = logic 1, automatic calibration is not performed. Leaving this bit set to logic 1 can be used to permanently disable automatic calibration.
- It is possible to write data to the ClkQDelay[4:0] bits using the microprocessor. The aim could be to disable automatic calibration and set the delay using the software. Configuring the delay value using the software requires bit ClkQCalib to have been previously set to logic 1 and a time interval of at least 4.8 μs has elapsed. Each delay value must be written with bit ClkQCalib set to logic 1. If bit ClkQCalib is logic 0, the configured delay value is overwritten by the next automatic calibration interval.

9.10.2.2 Amplifier

The demodulated signal must be amplified by the variable amplifier to achieve the best performance. The gain of the amplifiers can be adjusted using the RxControl1 register Gain[1:0] bits; see Table 27.

Table 27. Gain factors for the internal amplifier

See Table 83 "RxControl1 register bit descriptions" on page 61 for additional information.

Register setting	Gain factor [dB] (simulation results)
00	20
01	24
10	31
11	35

All information provided in this document is subject to legal disclaimers.

© NXP Semiconductors N.V. 2015. All rights reserved.

9.10.2.3 Correlation circuitry

The correlation circuitry calculates the degree of matching between the received and an expected signal. The output is a measure of the amplitude of the expected signal in the received signal. This is done for both, the Q and I-channels. The correlator provides two outputs for each of the two input channels, resulting in a total of four output signals.

The correlation circuitry needs the phase information for the incoming card signal for optimum performance. This information is defined for the microprocessor using the BitPhase register. This value defines the phase relationship between the transmitter and receiver clock in multiples of the BitPhase time ($t_{BitPhase}$) = 1 / 13.56 MHz.

9.10.2.4 Evaluation and digitizer circuitry

The correlation results are evaluated for each bit-half of the Manchester coded signal. The evaluation and digitizer circuit decides from the signal strengths of both bit-halves, if the current bit is valid

- If the bit is valid, its value is identified
- If the bit is not valid, it is checked to identify if it contains a bit-collision

Select the following levels for optimal using RxThreshold register bits:

- **MinLevel[3:0]:** defines the minimum signal strength of the stronger bit-halve's signal which is considered valid.
- **CollLevel[3:0]:** defines the minimum signal strength relative to the amplitude of the stronger half-bit that has to be exceeded by the weaker half-bit of the Manchester coded signal to generate a bit-collision. If the signal's strength is below this value, logic 1 and logic 0 can be determined unequivocally.

After data transmission, the card is not allowed to send its response before a preset time period which is called the frame guard time in the ISO/IEC 14443 standard. The length of this time period is set using the RxWait register's RxWait[7:0] bits. The RxWait register defines when the receiver is switched on after data transmission to the card in multiples of one bit duration.

If bit RcvClkSeII is set to logic 1, the I-clock is used to clock the correlator and evaluation circuits. If bit RcvClkSeII is set to logic 0, the Q-clock is used.

Remark: It is recommended to use the Q-clock.

9.11 Serial signal switch

The MFRC531 comprises two main blocks:

- **digital circuitry:** comprising the state machines, encoder and decoder logic etc.
- **analog circuitry**: comprising the modulator, antenna drivers, receiver and amplification circuitry

The interface between these two blocks can be configured so that the interface signals are routed to pins MFIN and MFOUT. This makes it possible to connect the analog part of one MFRC531 to the digital part of another device.

The serial signal switch can be used to measure MIFARE and ISO/IEC 14443 A.

All information provided in this document is subject to legal disclaimers.

© NXP Semiconductors N.V. 2015. All rights reserved.

Remark: Pin MFIN can only be accessed at 106 kBd based on ISO/IEC 14443 A. The Manchester signal and the Manchester signal with subcarrier can only be accessed on pin MFOUT at 106 kBd based on ISO/IEC 14443 A.

9.11.1 Serial signal switch block diagram

Figure 13 shows the serial signal switches. Three different switches are implemented in the serial signal switch enabling the MFRC531 to be used in different configurations.

The serial signal switch can also be used to check the transmitted and received data during the design-in phase or for test purposes. Section 15.2.1 on page 101 describes the analog test signals and measurements at the serial signal switch.

Remark: The SLR400 uses pin name SIGOUT for pin MFOUT. The MFRC531 functionality includes the test modes for the SLRC400 using pin MFOUT.

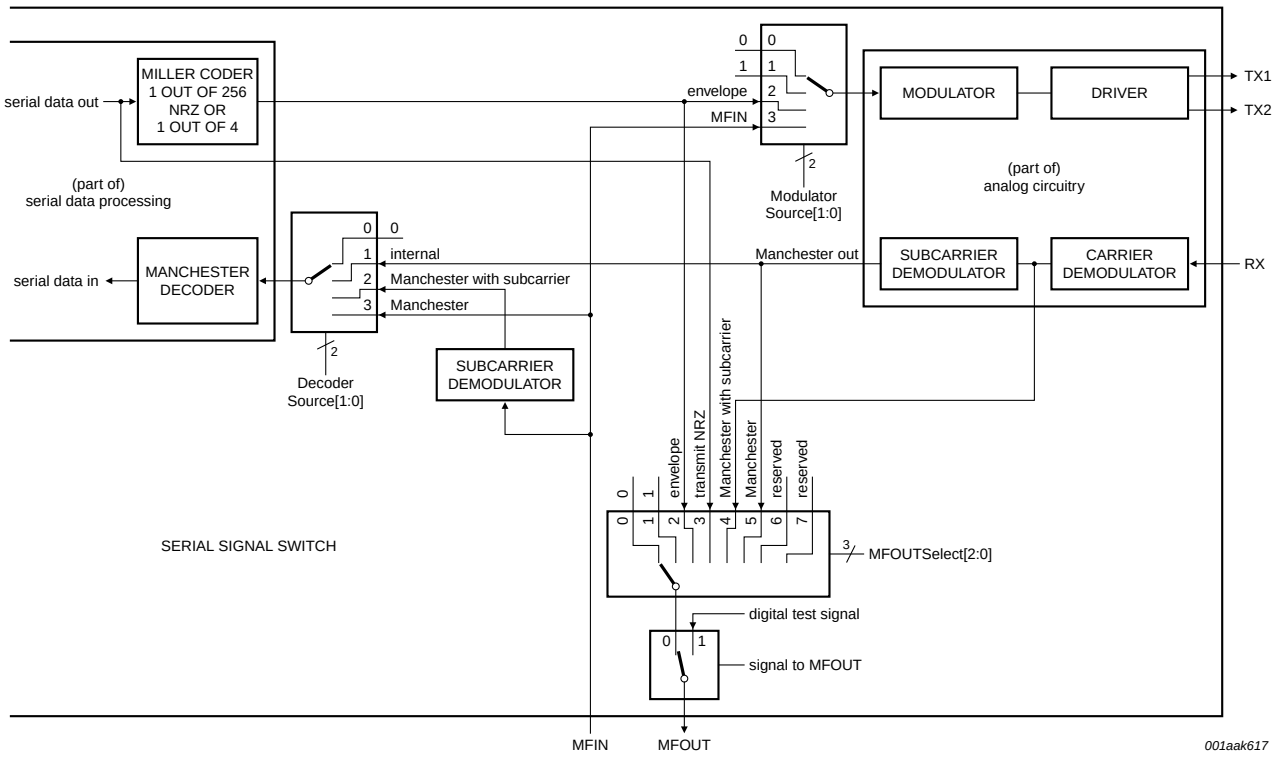

Fig 13. Serial signal switch block diagram

Section 9.11.2, Section 9.11.2.1 and Section 9.11.2.2 describe the relevant registers and settings used to configure and control the serial signal switch.

9.11.2 Serial signal switch registers

The RxControl2 register DecoderSource[1:0] bits define the input signal for the internal Manchester decoder and are described in Table 28.

All information provided in this document is subject to legal disclaimers.

© NXP Semiconductors N.V. 2015. All rights reserved.

Table 28. DecoderSource[1:0] values

See Table 93 on page 64 for additional information.

Number	DecoderSource [1:0]	Input signal to decoder
0	00	constant 0
1	01	output of the analog part. This is the default configuration
2	10	direct connection to pin MFIN; expects an 847.5 kHz subcarrier signal modulated by a Manchester encoded signal
3	11	direct connection to pin MFIN; expects a Manchester encoded signal

The TxControl register ModulatorSource[1:0] bits define the signal used to modulate the transmitted 13.56 MHz energy carrier. The modulated signal drives pins TX1 and TX2.

Table 29. ModulatorSource[1:0] values

See Table 93 on page 64 for additional information.

Number	ModulatorSource [1:0]	Input signal to modulator
0	00	constant 0 (energy carrier off on pins TX1 and TX2)
1	01	constant 1 (continuous energy carrier on pins TX1 and TX2)
2	10	modulation signal (envelope) from the internal encoder. This is the default configuration.
3	11	direct connection to MFIN; expects a Miller pulse coded signal

The MFOUTSelect register MFOUTSelect[2:0] bits select the output signal which is to be routed to pin MFOUT.

Table 30. MFOUTSelect[2:0] values

See Table 106 on page 67 for additional information.

Number	MFOUTSelect [2:0]	Signal routed to pin MFOUT
0	000	constant LOW
1	001	constant HIGH
2	010	modulation signal (envelope) from the internal encoder
3	011	serial data stream to be transmitted; the same as for MFOUTSelect[2:0] = 001 but not encoded by the selected pulse encoder
4	100	output signal of the receiver circuit; card modulation signal regenerated and delayed
5	101	output signal of the subcarrier demodulator; Manchester coded card signal
6	110	reserved
7	111	reserved

To use the MFOUTSelect[2:0] bits, the TestDigiSelect register SignalToMFOUT bit must be logic 0.

9.11.2.1 Active antenna concept

The MFRC531 analog and digital circuitry is accessed using pins MFIN and MFOUT. Table 31 lists the required settings.

All information provided in this document is subject to legal disclaimers.

© NXP Semiconductors N.V. 2015. All rights reserved.

Table 31. Register settings to enable use of the analog circuitry

Register	Number[1]	Signal	MFRC531 pin
Analog circuitry settings			
ModulatorSource	3	Miller pulse encoded	MFIN
MFOUTSelect	4	Manchester encoded with subcarrier	MFOUT
DecoderSource	X	-	-
Digital circuitry settings			
ModulatorSource	X	-	-
MFOUTSelect	2	Miller pulse encoded	MFOUT
DecoderSource	2	Manchester encoded with subcarrier	MFIN

[1] The number column refers to the value in the number column of Table 28, Table 29 and Table 30.

Two MFRC531 devices configured as described in Table 31 can be connected to each other using pins MFOUT and MFIN.

Remark: The active antenna concept can only be used at 106 kBd based on ISO/IEC 14443 A.

9.11.2.2 Driving both RF parts

It is possible to connect both passive and active antennas to a single IC. The passive antenna pins TX1, TX2 and RX are connected using the appropriate filter and matching circuit. At the same time an active antenna is connected to pins MFOUT and MFIN. In this configuration, two RF parts can be driven, one after another, by one microprocessor.

9.12 MIFARE higher baud rates

The MIFARE system is specified with a fixed baud rate of 106 kBd for communication on the RF interface. The current version of ISO/IEC 14443 A also defines 106 kBd for the initial phase of a communication between Proximity Integrated Circuit Cards (PICC) and Proximity Coupling Devices (PCD).

To cover requirements of large data transmissions and to speed up terminal to card communication, the MFRC531 supports communication at MIFARE higher baud rates in combination with a microcontroller IC such as the MIFARE ProX.

Table 32. MIFARE higher baud rates

Communication direction	Baud rates (kBd)
MFRC531 based PCD → microcontroller PICC supporting higher baud rates	106, 212, 424
Microcontroller PICC supporting higher baud rates → MFRC531 based PCD	106, 212, 424

The MIFARE higher baud rates concept is described in the application note: *MIFARE Implementation of Higher Baud rates* Ref. 5. This application note covers the integration of the MIFARE higher baud rates communication concept in current applications.

All information provided in this document is subject to legal disclaimers.

© NXP Semiconductors N.V. 2015. All rights reserved.

9.13 ISO/IEC 14443 B communication scheme

The international standard ISO/IEC 14443 covers two communication schemes; ISO/IEC 14443 A and ISO/IEC 14443 B. The MFRC531 reader IC fully supports both ISO/IEC 14443 variants.

Table 33 describes the registers and flags covered by the ISO/IEC 14443 B communication protocol.

Table 33. ISO/IEC 14443 B registers and flags

Flag	Register	Bit	Register address
CharSpacing[2:0]	TypeBFraming	4 to 2	17h
CoderRate[2:0]	CoderControl	5 to 3	14h
EOFWidth	TypeBFraming	5	17h
FilterAmpDet	BPSKDemControl	4	1Dh
Force100ASK	TxControl	4	11h
GsCfgCW[5:0]	CwConductance	5 to 0	12h
GsCfgMod[5:0]	ModConductance	5 to 0	13h
MinLevel[3:0]	RxThreshold	7 to 4	1Ch
NoTxEOF	TypeBFraming	6	17h
NoTxSOF	TypeBFraming	7	17h
NoRxEGT	BPSKDemControl	6	1Dh
NoRxEOF	BPSKDemControl	5	1Dh
NoRxSOF	BPSKDemControl	7	1Dh
RxCoding	DecoderControl	0	1Ah
RxFraming[1:0]	DecoderControl	4 to 3	1Ah
SOFWidth[1:0]	TypeBFraming	1 to 0	17h
SubCPulses[2:0]	RxControl1	7 to 5	19h
TauB[1:0]	BPSKDemControl	1 to 0	1Dh
TauD[1:0]	BPSKDemControl	3 to 2	1Dh
TxCoding[2:0]	CoderControl	2 to 0	14h

As reference documentation, the international standard *ISO/IEC 14443 Identification cards - Contactless integrated circuit(s) cards - Proximity cards, part 1-4* (Ref. 4) can be used.

Remark: NXP Semiconductors does not offer a basic function library to design-in the ISO/IEC 14443 B protocol.

All information provided in this document is subject to legal disclaimers.

© NXP Semiconductors N.V. 2015. All rights reserved.

9.14 MIFARE authentication and Crypto1

The security algorithm used in the MIFARE products is called Crypto1. It is based on a proprietary stream cipher with a 48-bit key length. To access data on MIFARE cards, knowledge of the key format is needed. The correct key must be available in the MFRC531 to enable successful card authentication and access to the card's data stored in the EEPROM.

After a card is selected as defined in ISO/IEC 14443 A standard, the user can continue with the MIFARE protocol. It is mandatory that card authentication is performed.

Crypto1 authentication is a 3-pass authentication which is automatically performed when the Authent1 and Authent2 commands are executed (see Section 11.6.3 on page 89 and Section 11.6.4 on page 89).

During the card authentication procedure, the security algorithm is initialized. After a successful authentication, communication with the MIFARE card is encrypted.

9.14.1 Crypto1 key handling

On execution of the authentication command, the MFRC531 reads the key from the key buffer. The key is always read from the key buffer and ensures Crypto1 authentication commands do not require addressing of a key. The user must ensure the correct key is prepared in the key buffer before triggering card authentication.

The key buffer can be loaded from:

- the EEPROM using the LoadKeyE2 command (see Section 11.6.1 on page 88)
- the microprocessor's FIFO buffer using the LoadKey command (see Section 11.6.2 on page 88). This is shown in Figure 14.

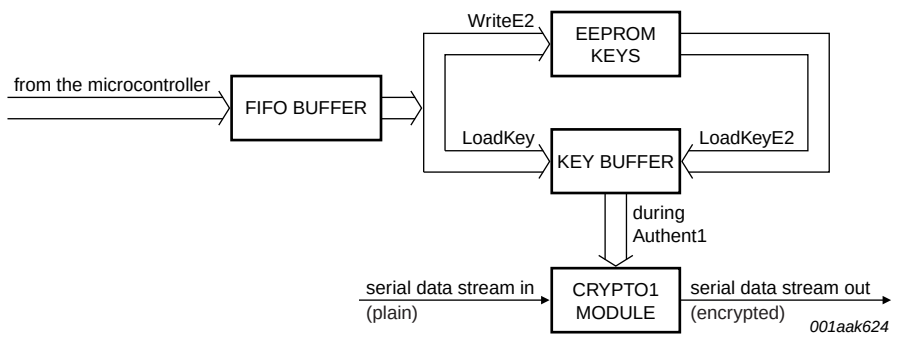

Fig 14. Crypto1 key handling block diagram

All information provided in this document is subject to legal disclaimers.

© NXP Semiconductors N.V. 2015. All rights reserved.

9.14.2 Authentication procedure

The Crypto1 security algorithm enables authentication of MIFARE cards. To obtain valid authentication, the correct key has to be available in the key buffer of the MFRC531. This can be ensured as follows:

1. Load the internal key buffer by using the LoadKeyE2 (see Section 11.6.1 on page 88) or the LoadKey (see Section 11.6.2 on page 88) commands.
2. Start the Authent1 command (see Section 11.6.3 on page 89). When finished, check the error flags to obtain the command execution status.
3. Start the Authent2 command (see Section 11.6.4 on page 89). When finished, check the error flags and bit Crypto1On to obtain the command execution status.

10. MFRC531 registers

10.1 Register addressing modes

Three methods can be used to operate the MFRC531:

- initiating functions and controlling data by executing commands
- configuring the functional operation using a set of configuration bits
- monitoring the state of the MFRC531 by reading status flags

The commands, configuration bits and flags are accessed using the microprocessor interface. The MFRC531 can internally address 64 registers using six address lines.

10.1.1 Page registers

The MFRC531 register set is segmented into eight pages contain eight registers each. A Page register can always be addressed, irrespective of which page is currently selected.

10.1.2 Dedicated address bus

When using the MFRC531 with the dedicated address bus, the microprocessor defines three address lines using address pins A0, A1 and A2. This enables addressing within a page. To switch between registers in different pages a paging mechanism needs to be used.

Table 34 shows how the register address is assembled.

Table 34. Dedicated address bus: assembling the register address

Register bit: UsePageSelect	Register address					
1	PageSelect2	PageSelect1	PageSelect0	A2	A1	A0

10.1.3 Multiplexed address bus

The microprocessor may define all six address lines at once using the MFRC531 with a multiplexed address bus. In this case, either the paging mechanism or linear addressing can be used.

Table 35 shows how the register address is assembled.

All information provided in this document is subject to legal disclaimers.

© NXP Semiconductors N.V. 2015. All rights reserved.

Table 35. Multiplexed address bus: assembling the register address

Multiplexed address bus type	UsePage Select	Register address					
Paging mode	1	PageSelect2	PageSelect1	PageSelect0	AD2	AD1	AD0
Linear addressing	0	AD5	AD4	AD3	AD2	AD1	AD0

10.2 Register bit behavior

Bits and flags for different registers behave differently, depending on their functions. In principle, bits with same behavior are grouped in common registers. Table 36 describes the function of the Access column in the register tables.

Table 36. Behavior and designation of register bits

Abbreviation	Behavior	Description
R/W	read and write	These bits can be read and written by the microprocessor. Since they are only used for control, their content is not influenced by internal state machines. **Example:** TimerReload register may be read and written by the microprocessor. It will also be read by internal state machines but never changed by them.
D	dynamic	These bits can be read and written by the microprocessor. Nevertheless, they may also be written automatically by internal state machines. **Example:** the Command register changes its value automatically after the execution of the command.
R	read only	These registers hold flags which have a value determined by internal states only. **Example:** the ErrorFlag register cannot be written externally but shows internal states.
W	write only	These registers are used for control only. They may be written by the microprocessor but cannot be read. Reading these registers returns an undefined value. **Example:** The TestAnaSelect register is used to determine the signal on pin AUX however, it is not possible to read its content.

All information provided in this document is subject to legal disclaimers.

© NXP Semiconductors N.V. 2015. All rights reserved.

10.3 Register overview

Table 37. MFRC531 register overview

Sub address (Hex)	Register name	Function	Refer to
Page 0: Command and status			
00h	Page	selects the page register	Table 39 on page 48
01h	Command	starts and stops command execution	Table 41 on page 48
02h	FIFOData	input and output for the 64-byte FIFO buffer	Table 43 on page 49
03h	PrimaryStatus	receiver, transmitter and FIFO buffer status flags	Table 45 on page 49
04h	FIFOLength	number of bytes buffered in the FIFO buffer	Table 47 on page 50
05h	SecondaryStatus	secondary status flags	Table 49 on page 51
06h	InterruptEn	enable and disable interrupt request control bits	Table 51 on page 51
07h	InterruptRq	interrupt request flags	Table 53 on page 52
Page 1: Control and status			
08h	Page	selects the page register	Table 39 on page 48
09h	Control	control flags for timer unit, power saving etc	Table 55 on page 53
0Ah	ErrorFlag	show the error status of the last command executed	Table 57 on page 53
0Bh	CollPos	bit position of the first bit-collision detected on the RF interface	Table 59 on page 54
0Ch	TimerValue	value of the timer	Table 61 on page 55
0Dh	CRCResultLSB	LSB of the CRC coprocessor register	Table 63 on page 55
0Eh	CRCResultMSB	MSB of the CRC coprocessor register	Table 65 on page 55
0Fh	BitFraming	adjustments for bit oriented frames	Table 67 on page 56
Page 2: Transmitter and coder control			
10h	Page	selects the page register	Table 39 on page 48
11h	TxControl	controls the operation of the antenna driver pins TX1 and TX2	Table 69 on page 57
12h	CwConductance	selects the conductance of the antenna driver pins TX1 and TX2	Table 71 on page 58
13h	ModConductance	defines the driver output conductance	Table 73 on page 58
14h	CoderControl	sets the clock frequency and the encoding	Table 75 on page 59
15h	ModWidth	selects the modulation pulse width	Table 77 on page 59
16h	ModWidthSOF	selects the SOF pulse-width modulation	Table 79 on page 59
17h	TypeBFraming	defines the framing for ISO/IEC 14443 B communication	Table 80 on page 60
Page 3: Receiver and decoder control			
18	Page	selects the page register	Table 39 on page 48
19	RxControl1	controls receiver behavior	Table 82 on page 61
1A	DecoderControl	controls decoder behavior	Table 84 on page 62
1B	BitPhase	selects the bit-phase between transmitter and receiver clock	Table 86 on page 62
1C	RxThreshold	selects thresholds for the bit decoder	Table 88 on page 63
1D	BPSKDemControl	controls BPSK receiver behavior	Table 90 on page 63
1Eh	RxControl2	controls decoder and defines the receiver input source	Table 92 on page 64
1Fh	ClockQControl	clock control for the 90° phase-shifted Q-channel clock	Table 94 on page 64

All information provided in this document is subject to legal disclaimers.

© NXP Semiconductors N.V. 2015. All rights reserved.

Table 37. MFRC531 register overview *...continued*

Sub address (Hex)	Register name	Function	Refer to
Page 4: RF Timing and channel redundancy			
20h	Page	selects the page register	Table 39 on page 48
21h	RxWait	selects the interval after transmission before the receiver starts	Table 96 on page 65
22h	ChannelRedundancy	selects the method and mode used to check data integrity on the RF channel	Table 98 on page 65
23h	CRCPresetLSB	preset LSB value for the CRC register	Table 100 on page 66
24h	CRCPresetMSB	preset MSB value for the CRC register	Table 102 on page 66
25h	PreSet25	these values are not changed	
26h	MFOUTSelect	selects internal signal applied to pin MFOUT, includes the MSB of TimeSlotPeriod value; see Table 105 on page 67	Table 104 on page 66
27h	PreSet27	these values are not changed	Table 107 on page 67
Page 5: FIFO, timer and IRQ pin configuration			
28h	Page	selects the page register	Table 39 on page 48
29h	FIFOLevel	defines the FIFO buffer overflow and underflow warning levels	Table 47 on page 50
2Ah	TimerClock	selects the timer clock divider	Table 110 on page 68
2Bh	TimerControl	selects the timer start and stop conditions	Table 112 on page 69
2Ch	TimerReload	defines the timer preset value	Table 114 on page 69
2Dh	IRQPinConfig	configures pin IRQ output stage	Table 116 on page 70
2Eh	PreSet2E	these values are not changed	Table 118 on page 70
2Fh	PreSet2F	these values are not changed	Table 119 on page 70
Page 6: reserved registers			
30h	Page	selects the page register	Table 39 on page 48
31h	reserved	reserved	Table 120 on page 70
32h	reserved	reserved	
33h	reserved	reserved	
34h	reserved	reserved	
35h	reserved	reserved	
36h	reserved	reserved	
37h	reserved	reserved	
Page 7: Test control			
38h	Page	selects the page register	Table 39 on page 48
39h	reserved	reserved	Table 121 on page 71
3Ah	TestAnaSelect	selects analog test mode	Table 122 on page 71
3Bh	reserved	reserved	Table 124 on page 72
3Ch	reserved	reserved	Table 125 on page 72
3Dh	TestDigiSelect	selects digital test mode	Table 126 on page 72
3Eh	reserved	reserved	Table 128 on page 73
3Fh	reserved	reserved	

All information provided in this document is subject to legal disclaimers.

© NXP Semiconductors N.V. 2015. All rights reserved.

10.4 MFRC531 register flags overview

Table 38. MFRC531 register flags overview

Flag(s)	Register	Bit	Address
AccessErr	ErrorFlag	5	0Ah
BitPhase[7:0]	BitPhase	7 to 0	1Bh
CharSpacing[2:0]	TypeBFraming	4 to 2	17h,
ClkQ180Deg	ClockQControl	7	1Fh
ClkQCalib	ClockQControl	6	1Fh
ClkQDelay[4:0]	ClockQControl	4 to 0	1Fh
CoderRate[2:0]	CoderControl	5 to 3	14h
CollErr	ErrorFlag	0	0Ah
CollLevel[3:0]	RxThreshold	3 to 0	1Ch
CollPos[7:0]	CollPos	7 to 0	0Bh
Command[5:0]	Command	5 to 0	01h
CRC3309	ChannelRedundancy	5	22h
CRC8	ChannelRedundancy	4	22h
CRCErr	ErrorFlag	3	0Ah
CRCPresetLSB[7:0]	CRCPresetLSB	7 to 0	23h
CRCPresetMSB[7:0]	CRCPresetMSB	7 to 0	24h
CRCReady	SecondaryStatus	5	05h
CRCResultMSB[7:0]	CRCResultMSB	7 to 0	0Eh
CRCResultLSB[7:0]	CRCResultLSB	7 to 0	0Dh
Crypto1On	Control	3	09h
DecoderSource[1:0]	RxControl2	1 to 0	1Eh
E2Ready	SecondaryStatus	6	05h
EOFWidth	TypeBFraming	5	17h
Err	PrimaryStatus	2	03h
FIFOData[7:0]	FIFOData	7 to 0	02h
FIFOLength[6:0]	FIFOLength	6 to 0	04h
FIFOOvfl	ErrorFlag	4	0Ah
FilterAmpDet	BPSKDemControl	4	1Dh
FlushFIFO	Control	0	09h
Force100ASK	TxControl	4	11h
FramingErr	ErrorFlag	2	0Ah
Gain[1:0]	RxControl1	1 to 0	19h
GsCfgCW[5:0]	CwConductance	5 to 0	12h
GsCfgMod[5:0]	ModConductance	5 to 0	13h
HiAlert	PrimaryStatus	1	03h
HiAlertIEn	InterruptEn	1	06h
HiAlertIRq	InterruptRq	1	07h
IdleIEn	InterruptEn	2	06h
IdleIRq	InterruptRq	2	07h

All information provided in this document is subject to legal disclaimers.

© NXP Semiconductors N.V. 2015. All rights reserved.

Table 38. MFRC531 register flags overview *...continued*

Flag(s)	Register	Bit	Address
IFDetectBusy	Command	7	01h
IRq	PrimaryStatus	3	03h
IRQInv	IRQPinConfig	1	2Dh
IRQPushPull	IRQPinConfig	0	2Dh
ISO Selection[1:0]	RxControl1	4 to 3	19h
KeyErr	ErrorFlag	6	0Ah
LoAlert	PrimaryStatus	0	03h
LoAlertIEn	InterruptEn	0	06h
LoAlertIRq	InterruptRq	0	07h
LPOff	RxControl1	2	19h
MFOUTSelect[2:0]	MFOUTSelect	2 to 0	26h
MinLevel[3:0]	RxThreshold	7 to 4	1Ch
ModemState[2:0]	PrimaryStatus	6 to 4	03h
ModulatorSource[1:0]	TxControl	6 to 5	11h
ModWidth[7:0]	ModWidth	7 to 0	15h
NoRxEGT	BPSKDemControl	6	1Dh
NoRxEOF	BPSKDemControl	5	1Dh
NoRxSOF	BPSKDemControl	7	1Dh
NoTxEOF	TypeBFraming	6	17h
NoTxSOF	TypeBFraming	7	17h
PageSelect[2:0]	Page	2 to 0	00h, 08h, 10h, 18h, 20h, 28h, 30h and 38h
ParityEn	ChannelRedundancy	0	22h
ParityErr	ErrorFlag	1	0Ah
ParityOdd	ChannelRedundancy	1	22h
PowerDown	Control	4	09h
RcvClkSeII	RxControl2	7	1Eh
RxAlign[2:0]	BitFraming	6 to 4	0Fh
RxAutoPD	RxControl2	6	1Eh
RxCRCEn	ChannelRedundancy	3	22h
RxCoding	DecoderControl	0	1Ah
RxFraming[1:0]	DecoderControl	4 to 3	1Ah
RxIEn	InterruptEn	3	06h
RxIRq	InterruptRq	3	07h
RxLastBits[2:0]	SecondaryStatus	2 to 0	05h
RxMultiple	DecoderControl	6	1Ah
RxWait[7:0]	RxWait	7 to 0	21h
SetIEn	InterruptEn	7	06h
SetIRq	InterruptRq	7	07h
SignalToMFOUT	TestDigiSelect	7	3Dh
SOFWidth[1:0]	TypeBFraming	1 to 0	17h

All information provided in this document is subject to legal disclaimers.

© NXP Semiconductors N.V. 2015. All rights reserved.

Table 38. MFRC531 register flags overview *...continued*

Flag(s)	Register	Bit	Address
StandBy	Control	5	09h
SubCPulses[2:0]	RxControl1	7 to 5	19h
TauB[1:0]	BPSKDemControl	1 to 0	1Dh
TauD[1:0]	BPSKDemControl	3 to 2	1Dh
TAutoRestart	TimerClock	5	2Ah
TestAnaOutSel[4:0]	TestAnaSelect	3 to 0	3Ah
TestDigiSignalSel[6:0]	TestDigiSelect	6 to 0	3Dh
TimerIEn	InterruptEn	5	06h
TimerIRq	InterruptRq	5	07h
TimerValue[7:0]	TimerValue	7 to 0	0Ch
TimeSlotPeriod[7:0]	TimeSlotPeriod	7 to 0	25h
TimeSlotPeriodMSB	MFOUTSelect	4	26h
TPreScaler[4:0]	TimerClock	4 to 0	2Ah
TReloadValue[7:0]	TimerReload	7 to 0	2Ch
TRunning	SecondaryStatus	7	05h
TStartTxBegin	TimerControl	0	2Bh
TStartTxEnd	TimerControl	1	2Bh
TStartNow	Control	1	09h
TStopRxBegin	TimerControl	2	2Bh
TStopRxEnd	TimerControl	3	2Bh
TStopNow	Control	2	09h
TX1RFEn	TxControl	0	11h
TX2Cw	TxControl	3	11h
TX2Inv	TxControl	3	11h
TX2RFEn	TxControl	1	11h
TxCoding[2:0]	CoderControl	2 to 0	14h
TxCRCEn	ChannelRedundancy	2	22h
TxIEn	InterruptEn	4	06h
TxIRq	InterruptRq	4	07h
TxLastBits[2:0]	BitFraming	2 to 0	0Fh
UsePageSelect	Page	7	00h, 08h, 10h, 18h, 20h, 28h, 30h and 38h
WaterLevel[5:0]	FIFOLevel	5 to 0	29h
ZeroAfterColl	DecoderControl	7	1Ah, bit 5

All information provided in this document is subject to legal disclaimers.

© NXP Semiconductors N.V. 2015. All rights reserved.

10.5 Register descriptions

10.5.1 Page 0: Command and status

10.5.1.1 Page register

Selects the page register.

Table 39. Page register (address: 00h, 08h, 10h, 18h, 20h, 28h, 30h, 38h) reset value: 1000 0000b, 80h bit allocation

Bit	7	6	5	4	3	2	1	0
Symbol	UsePageSelect	0000				PageSelect[2:0]		
Access	R/W	R/W				R/W	R/W	R/W

Table 40. Page register bit descriptions

Bit	Symbol	Value	Description
7	UsePageSelect	1	the value of PageSelect[2:0] is used as the register address A5, A4, and A3. The LSBs of the register address are defined using the address pins or the internal address latch, respectively.
		0	the complete content of the internal address latch defines the register address. The address pins are used as described in Table 5 on page 8.
6 to 3	0000	-	reserved
2 to 0	PageSelect[2:0]	-	when UsePageSelect = logic 1, the value of PageSelect is used to specify the register page (A5, A4 and A3 of the register address)

10.5.1.2 Command register

Starts and stops the command execution.

Table 41. Command register (address: 01h) reset value: x000 0000b, x0h bit allocation

Bit	7	6	5	4	3	2	1	0
Symbol	IFDetectBusy	0	Command[5:0]					
Access	R	R	D					

Table 42. Command register bit descriptions

Bit	Symbol	Value	Description
7	IFDetectBusy	-	shows the status of interface detection logic
		0	interface detection finished successfully
		1	interface detection ongoing
6	0	-	reserved
5 to 0	Command[5:0]	-	activates a command based on the Command code. Reading this register shows which command is being executed.

All information provided in this document is subject to legal disclaimers.

© NXP Semiconductors N.V. 2015. All rights reserved.

10.5.1.3 FIFOData register

Input and output of the 64 byte FIFO buffer.

Table 43. FIFOData register (address: 02h) reset value: xxxx xxxxb, 05h bit allocation

Bit	7	6	5	4	3	2	1	0
Symbol	FIFOData[7:0]							
Access	D							

Table 44. FIFOData register bit descriptions

Bit	Symbol	Description
7 to 0	FIFOData[7:0]	data input and output port for the internal 64-byte FIFO buffer. The FIFO buffer acts as a parallel in to parallel out converter for all data streams.

10.5.1.4 PrimaryStatus register

Bits relating to receiver, transmitter and FIFO buffer status flags.

Table 45. PrimaryStatus register (address: 03h) reset value: 0000 0101b, 05h bit allocation

Bit	7	6	5	4	3	2	1	0
Symbol	0	ModemState[2:0]			IRq	Err	HiAlert	LoAlert
Access	R	R			R	R	R	R

Table 46. PrimaryStatus register bit descriptions

Bit	Symbol	Value	Status	Description
7	0	-		reserved
6 to 4	ModemState[2:0]			shows the state of the transmitter and receiver state machines:
		000	Idle	neither the transmitter or receiver are operating; neither of them are started or have input data
		001	TxSOF	transmit start of frame pattern
		010	TxData	transmit data from the FIFO buffer (or redundancy CRC check bits)
		011	TxEOF	transmit End Of Frame (EOF) pattern
		100	GoToRx1	intermediate state 1; receiver starts
			GoToRx2	intermediate state 2; receiver finishes
		101	PrepareRx	waiting until the RxWait register time period expires
		110	AwaitingRx	receiver activated; waiting for an input signal on pin RX
		111	Receiving	receiving data
3	IRq	-		shows any interrupt source requesting attention based on the InterruptEn register flag settings

All information provided in this document is subject to legal disclaimers.

© NXP Semiconductors N.V. 2015. All rights reserved.

Table 46. PrimaryStatus register bit descriptions *...continued*

Bit	Symbol	Value	Status	Description
2	Err	1		any error flag in the ErrorFlag register is set
1	HiAlert	1		the alert level for the number of bytes in the FIFO buffer (FIFOLength[6:0]) is: $HiAlert = (64 - FIFOLength) \leq WaterLevel$ otherwise value = logic 0 Example: FIFOLength = 60, WaterLevel = 4 then HiAlert = logic 1 FIFOLength = 59, WaterLevel = 4 then HiAlert = logic 0
0	LoAlert	1		the alert level for number of bytes in the FIFO buffer (FIFOLength[6:0]) is: $LoAlert = FIFOLength \leq WaterLevel$ otherwise value = logic 0 Example: FIFOLength = 4, WaterLevel = 4 then LoAlert = logic 1 FIFOLength = 5, WaterLevel = 4 then LoAlert = logic 0

10.5.1.5 FIFOLength register

Number of bytes in the FIFO buffer.

Table 47. FIFOLength register (address: 04h) reset value: 0000 0000b, 00h bit allocation

Bit	7	6	5	4	3	2	1	0
Symbol	0	FIFOLength[6:0]						
Access	R	R						

Table 48. FIFOLength bit descriptions

Bit	Symbol	Description
7	0	reserved
6 to 0	FIFOLength[6:0]	gives the number of bytes stored in the FIFO buffer. Writing increments the FIFOLength register value while reading decrements the FIFOLength register value

All information provided in this document is subject to legal disclaimers.

© NXP Semiconductors N.V. 2015. All rights reserved.

10.5.1.6 SecondaryStatus register

Various secondary status flags.

Table 49. SecondaryStatus register (address: 05h) reset value: 01100 000b, 60h bit allocation

Bit	7	6	5	4	3	2	1	0
Symbol	TRunning	E2Ready	CRCReady	00		RxLastBits[2:0]		
Access	R	R	R	R		R		

Table 50. SecondaryStatus register bit descriptions

Bit	Symbol	Value	Description
7	TRunning	1	the timer unit is running and the counter decrements the TimerValue register on the next timer clock cycle
		0	the timer unit is not running
6	E2Ready	1	EEPROM programming is finished
		0	EEPROM programming is ongoing
5	CRCReady	1	CRC calculation is finished
		0	CRC calculation is ongoing
4 to 3	00	-	reserved
2 to 0	RxLastBits[2:0]	-	shows the number of valid bits in the last received byte. If zero, the whole byte is valid

10.5.1.7 InterruptEn register

Control bits to enable and disable passing of interrupt requests.

Table 51. InterruptEn register (address: 06h) reset value: 0000 0000b, 00h bit allocation

Bit	7	6	5	4	3	2	1	0
Symbol	SetIEn	0	TimerIEn	TxIEn	RxIEn	IdleIEn	HiAlertIEn	LoAlertIEn
Access	W	R/W	R/W	R/W	R/W	R/W	R/W	R/W

Table 52. InterruptEn register bit descriptions

Bit	Symbol	Value	Description
7	SetIEn	1	indicates that the marked bits in the InterruptEn register are set
		0	clears the marked bits
6	0	-	reserved
5	TimerIEn	-	sends the TimerIRq timer interrupt request to pin IRQ[1]
4	TxIEn	-	sends the TxIRq transmitter interrupt request to pin IRQ[1]
3	RxIEn	-	sends the RxIRq receiver interrupt request to pin IRQ[1]
2	IdleIEn	-	sends the IdleIRq idle interrupt request to pin IRQ[1]
1	HiAlertIEn	-	sends the HiAlertIRq high alert interrupt request to pin IRQ[1]
0	LoAlertIEn	-	sends the LoAlertIRq low alert interrupt request to pin IRQ[1]

[1] This bit can only be set or cleared using bit SetIEn.

All information provided in this document is subject to legal disclaimers.

© NXP Semiconductors N.V. 2015. All rights reserved.

10.5.1.8 InterruptRq register

Interrupt request flags.

Table 53. InterruptRq register (address: 07h) reset value: 0000 0000b, 00h bit allocation

Bit	7	6	5	4	3	2	1	0
Symbol	SetIRq	0	TimerIRq	TxIRq	RxIRq	IdleIRq	HiAlertIRq	LoAlertIRq
Access	W	R/W	D	D	D	D	D	D

Table 54. InterruptRq register bit descriptions

Bit	Symbol	Value	Description
7	SetIRq	1	sets the marked bits in the InterruptRq register
		0	clears the marked bits in the InterruptRq register
6	0	-	reserved
5	TimerIRq	1	timer decrements the TimerValue register to zero
		0	timer decrements are still greater than zero
4	TxIRq	1	TxIRq is set to logic 1 if one of the following events occurs:
			Transceive command; all data transmitted
			Authent1 and Authent2 commands; all data transmitted
			WriteE2 command; all data is programmed
			CalcCRC command; all data is processed
		0	when not acted on by Transceive, Authent1, Authent2, WriteE2 or CalcCRC commands
3	RxIRq	1	the receiver terminates
		0	reception still ongoing
2	IdleIRq	1	command terminates correctly. For example; when the Command register changes its value from any command to the Idle command. If an unknown command is started the IdleIRq bit is set. Microprocessor start-up of the Idle command does not set the IdleIRq bit.
		0	IdleIRq = logic 0 in all other instances
1	HiAlertIRq	1	PrimaryStatus register HiAlert bit is set[1]
		0	PrimaryStatus register HiAlert bit is not set
0	LoAlertIRq	1	PrimaryStatus register LoAlert bit is set[1]
		0	PrimaryStatus register LoAlert bit is not set

[1] PrimaryStatus register Bit HiAlertIRq stores this event and it can only be reset using bit SetIRq.

All information provided in this document is subject to legal disclaimers.

© NXP Semiconductors N.V. 2015. All rights reserved.

10.5.2 Page 1: Control and status

10.5.2.1 Page register

Selects the page register; see Section 10.5.1.1 “Page register” on page 48.

10.5.2.2 Control register

Various control flags, for timer, power saving, etc.

Table 55. Control register (address: 09h) reset value: 0000 0000b, 00h bit allocation

Bit	7	6	5	4	3	2	1	0
Symbol	00		StandBy	PowerDown	Crypto1On	TStopNow	TStartNow	FlushFIFO
Access	R/W		D	D	D	D	D	D

Table 56. Control register bit descriptions

Bit	Symbol	Value	Description
7 to 6	00	-	reserved
5	StandBy	1	activates Standby mode. The current consuming blocks are switched off but the clock keeps running
4	PowerDown	1	activates Power-down mode. The current consuming blocks are switched off including the clock
3	Crypto1On	1	Crypto1 unit is switched on and all data communication with the card is encrypted. This bit can only be set to logic 1 by successful execution of the Authent2 command
		0	Crypto1 unit is switched off. All data communication with the card is unencrypted (plain)
2	TStopNow	1	immediately stops the timer. Reading this bit always returns logic 0
1	TStartNow	1	immediately starts the timer. Reading this bit will always returns logic 0
0	FlushFIFO	1	immediately clears the internal FIFO buffer’s read and write pointer, the FIFOLength[6:0] bits and FIFOOvfl flag are set to logic 0. Reading this bit always returns logic 0

10.5.2.3 ErrorFlag register

Error flags show the error status of the last executed command.

Table 57. ErrorFlag register (address: 0Ah) reset value: 0100 0000b, 40h bit allocation

Bit	7	6	5	4	3	2	1	0
Symbol	0	KeyErr	AccessErr	FIFOOvfl	CRCErr	FramingErr	ParityErr	CollErr
Access	R	R	R	R	R	R	R	R

Table 58. ErrorFlag register bit descriptions

Bit	Symbol	Value	Description
7	0	-	reserved
6	KeyErr	1	set when the LoadKeyE2 or LoadKey command recognize that the input data is not encoded based on the Key format definition
		0	set when the LoadKeyE2 or the LoadKey command starts

All information provided in this document is subject to legal disclaimers.

© NXP Semiconductors N.V. 2015. All rights reserved.

Table 58. ErrorFlag register bit descriptions *...continued*

Bit	Symbol	Value	Description
5	AccessErr	1	set when the access rights to the EEPROM are violated
		0	set when an EEPROM related command starts
4	FIFOOvfl	1	set when the microprocessor or MFRC531 internal state machine (e.g. receiver) tries to write data to the FIFO buffer when it is full
3	CRCErr	1	set when RxCRCEn is set and the CRC fails
		0	automatically set during the PrepareRx state in the receiver start phase
2	FramingErr	1	set when the SOF is incorrect
		0	automatically set during the PrepareRx state in the receiver start phase
1	ParityErr	1	set when the parity check fails
		0	automatically set during the PrepareRx state in the receiver start phase
0	CollErr	1	set when a bit-collision is detected[1]
		0	automatically set during the PrepareRx state in the receiver start phase[1]

[1] Only valid for communication using ISO/IEC 14443 A.

10.5.2.4 CollPos register

Bit position of the first bit-collision detected on the RF interface.

Table 59. CollPos register (address: 0Bh) reset value: 0000 0000b, 00h bit allocation

Bit	7	6	5	4	3	2	1	0
Symbol	CollPos[7:0]							
Access	R							

Table 60. CollPos register bit descriptions

Bit	Symbol	Description
7 to 0	CollPos[7:0]	this register shows the bit position of the first detected collision in a received frame. Example:
		00h indicates a bit collision in the start bit
		01h indicates a bit collision in the 1st bit
		...
		08h indicates a bit collision in the 8th bit

Remark: A bit collision is not indicated in the CollPos register when using the ISO/IEC 14443 B protocol standard.

All information provided in this document is subject to legal disclaimers.

© NXP Semiconductors N.V. 2015. All rights reserved.

10.5.2.5 TimerValue register

Value of the timer.

Table 61. TimerValue register (address: 0Ch) reset value: xxxx xxxxb, xxh bit allocation

Bit	7	6	5	4	3	2	1	0
Symbol	TimerValue[7:0]							
Access	R							

Table 62. TimerValue register bit descriptions

Bit	Symbol	Description
7 to 0	TimerValue[7:0]	this register shows the timer counter value

10.5.2.6 CRCResultLSB register

LSB of the CRC coprocessor register.

Table 63. CRCResultLSB register (address: 0Dh) reset value: xxxx xxxxb, xxh bit allocation

Bit	7	6	5	4	3	2	1	0
Symbol	CRCResultLSB[7:0]							
Access	R							

Table 64. CRCResultLSB register bit descriptions

Bit	Symbol	Description
7 to 0	CRCResultLSB[7:0]	gives the CRC register's least significant byte value; only valid if CRCReady = logic 1

10.5.2.7 CRCResultMSB register

MSB of the CRC coprocessor register.

Table 65. CRCResultMSB register (address: 0Eh) reset value: xxxx xxxxb, xxh bit allocation

Bit	7	6	5	4	3	2	1	0
Symbol	CRCResultMSB[7:0]							
Access	R							

Table 66. CRCResultMSB register bit descriptions

Bit	Symbol	Description
7 to 0	CRCResultMSB[7:0]	gives the CRC register's most significant byte value; only valid if CRCReady = logic 1. The register's value is undefined for 8-bit CRC calculation.

All information provided in this document is subject to legal disclaimers.

© NXP Semiconductors N.V. 2015. All rights reserved.

10.5.2.8 BitFraming register

Adjustments for bit oriented frames.

Table 67. BitFraming register (address: 0Fh) reset value: 0000 0000b, 00h bit allocation

Bit	7	6	5	4	3	2	1	0
Symbol	0	RxAlign[2:0]			0	TxLastBits[2:0]		
Access	R/W	D			R/W	D		

Table 68. BitFraming register bit descriptions

Bit	Symbol	Value	Description
7	0	-	reserved
6 to 4	RxAlign[2:0]		defines the bit position for the first bit received to be stored in the FIFO buffer. Additional received bits are stored in the next subsequent bit positions. After reception, RxAlign[2:0] is automatically cleared. For example:
		000	the LSB of the received bit is stored in bit position 0 and the second received bit is stored in bit position 1
		001	the LSB of the received bit is stored in bit position 1, the second received bit is stored in bit position 2
		...	
		111	the LSB of the received bit is stored in bit position 7, the second received bit is stored in the next byte in bit position 0
3	0	-	reserved
2 to 0	TxLastBits[2:0]	-	defines the number of bits of the last byte that shall be transmitted. 000 indicates that all bits of the last byte will be transmitted. TxLastBits[2:0] is automatically cleared after transmission.

All information provided in this document is subject to legal disclaimers.

© NXP Semiconductors N.V. 2015. All rights reserved.

10.5.3 Page 2: Transmitter and control

10.5.3.1 Page register

Selects the page register; see Section 10.5.1.1 “Page register” on page 48.

10.5.3.2 TxControl register

Controls the logical behavior of the antenna pin TX1 and TX2.

Table 69. TxControl register (address: 11h) reset value: 0101 1000b, 58h bit allocation

Bit	7	6	5	4	3	2	1	0
Symbol	0	ModulatorSource [1:0]		Force 100ASK	TX2Inv	TX2Cw	TX2RFEn	TX1RFEn
Access	R/W	R/W		R/W	R/W	R/W	R/W	R/W

Table 70. TxControl register bit descriptions

Bit	Symbol	Value	Description
7	0	-	this value must not be changed
6 to 5	ModulatorSource[1:0]		selects the source for the modulator input:
		00	modulator input is LOW
		01	modulator input is HIGH
		10	modulator input is the internal encoder
		11	modulator input is pin MFIN
4	Force100ASK	-	forces a 100 % ASK modulation independent ModConductance register setting
3	TX2Inv	0	delivers an inverted 13.56 MHz energy carrier output signal on pin TX2
2	TX2Cw	1	delivers a continuously unmodulated 13.56 MHz energy carrier output signal on pin TX2
		0	enables modulation of the 13.56 MHz energy carrier
1	TX2RFEn	1	the output signal on pin TX2 is the 13.56 MHz energy carrier modulated by the transmission data
		0	TX2 is driven at a constant output level
0	TX1RFEn	1	the output signal on pin TX1 is the 13.56 MHz energy carrier modulated by the transmission data
		0	TX1 is driven at a constant output level

All information provided in this document is subject to legal disclaimers.

© NXP Semiconductors N.V. 2015. All rights reserved.

10.5.3.3 CwConductance register

Selects the conductance of the antenna driver pins TX1 and TX2.

Table 71. CwConductance register (address: 12h) reset value: 0011 1111b, 3Fh bit allocation

Bit	7	6	5	4	3	2	1	0
Symbol	00		GsCfgCW[5:0]					
Access	R/W		R/W					

Table 72. CwConductance register bit descriptions

Bit	Symbol	Description
7 to 6	00	these values must not be changed
5 to 0	GsCfgCW[5:0]	defines the conductance register value for the output driver. This can be used to regulate the output power/current consumption and operating distance.

See Section 9.9.3 on page 30 for detailed information about GsCfgCW[5:0].

10.5.3.4 ModConductance register

Defines the driver output conductance.

Table 73. ModConductance register (address: 13h) reset value: 0011 1111b, 3Fh bit allocation

Bit	7	6	5	4	3	2	1	0
Symbol	00		GsCfgMod[5:0]					
Access	R/W		R/W					

Table 74. ModConductance register bit descriptions

Bit	Symbol	Description
7 to 6	00	these values must not be changed
5 to 0	GsCfgMod[5:0]	defines the ModConductance register value for the output driver during modulation. This is used to regulate the modulation index.

Remark: When Force100ASK = logic 1, the GsCfgMod[5:0] value has no effect.

See Section 9.9.3 on page 30 for detailed information about GsCfgMod[5:0].

All information provided in this document is subject to legal disclaimers.

© NXP Semiconductors N.V. 2015. All rights reserved.

10.5.3.5 CoderControl register

Sets the clock rate and the coding mode.

Table 75. CoderControl register (address: 14h) reset value: 0001 1001b, 19h bit allocation

Bit	7	6	5	4	3	2	1	0
Symbol	00		CoderRate[2:0]			TxCoding[2:0]		
Access	R/W		R/W			R/W		

Table 76. CoderControl register bit descriptions

Bit	Symbol	Value	Description
7 to 6	00	-	these values must not be changed
5 to 3	CoderRate[2:0]		this register defines the clock rate for the encoder circuit
		000	MIFARE 848 kBd
		001	MIFARE 424 kBd
		010	MIFARE 212 kBd
		011	MIFARE 106 kBd; ISO/IEC 14443 A
		100	ISO/IEC 14443 B
		111	reserved
2 to 0	TxCoding[2:0]		this register defines the bit encoding mode and framing during transmission
		000	NRZ according to ISO/IEC 14443 B
		001	MIFARE, ISO/IEC 14443 A, (Miller coded)
		010	reserved
		011	reserved

10.5.3.6 ModWidth register

Selects the pulse modulation width.

Table 77. ModWidth register (address: 15h) reset value: 0001 0011b, 13h bit allocation

Bit	7	6	5	4	3	2	1	0
Symbol	ModWidth[7:0]							
Access	R/W							

Table 78. ModWidth register bit descriptions

Bit	Symbol	Description
7 to 0	ModWidth[7:0]	defines the width of the modulation pulse based on $t_{mod} = 2 \cdot (ModWidth + 1) / f_{clk}$

10.5.3.7 PreSet16 register

Table 79. PreSet16 register (address: 16h) reset value: 0000 0000b, 00h bit allocation

Bit	7	6	5	4	3	2	1	0
Symbol	PreSet16[7:0]							
Access	R/W							

Remark: These values must not be changed.

All information provided in this document is subject to legal disclaimers.

© NXP Semiconductors N.V. 2015. All rights reserved.

10.5.3.8 TypeBFraming

Defines the framing for ISO/IEC 14443 B communication.

Table 80. TypeBFraming register (address: 17h) reset value: 0011 1011b, 3Bh bit allocation

Bit	7	6	5	4	3	2	1	0
Symbol	NoTxSOF	NoTxEOF	EOFWidth	CharSpacing[2:0]			SOFWidth[1:0]	
Access	R/W	R/W	R/W	R/W			R/W	

Table 81. TypeBFraming register bit descriptions

Bit	Symbol	Value	Description
7	NoTxSOF	1	TxCoder suppresses the SOF
		0	TxCoder does not suppress SOF
6	NoTxEOF	1	TxCoder suppresses the EOF
		0	TxCoder does not suppress the EOF
5	EOFWidth	1	set the EOF to a length to 11 ETU
		0	set the EOF to a length of 10 ETU
4 to 2	CharSpacing[2:0]		set the EGT length between 0 and 7 ETU
1 to 0	SOFWidth[1:0]	00	sets the SOF to a length to 10 ETU LOW and 2 ETU HIGH
		01	sets the SOF to a length of 10 ETU LOW and 3 ETU HIGH
		10	sets the SOF to a length of 11 ETU LOW and 2 ETU HIGH
		11	sets the SOF to a length of 11 ETU LOW and 3 ETU HIGH

All information provided in this document is subject to legal disclaimers.

© NXP Semiconductors N.V. 2015. All rights reserved.

10.5.4 Page 3: Receiver and decoder control

10.5.4.1 Page register

Selects the page register; see Section 10.5.1.1 “Page register” on page 48.

10.5.4.2 RxControl1 register

Controls receiver operation.

Table 82. RxControl1 register (address: 19h) reset value: 0111 0011b, 73h bit allocation

Bit	7	6	5	4	3	2	1	0
Symbol	SubCPulses[2:0]			ISOSelection[1:0]		LPOff	Gain[1:0]	
Access	R/W			R/W		R/W	R/W	

Table 83. RxControl1 register bit descriptions

Bit	Symbol	Value	Description
7 to 5	SubCPulses[2:0]		defines the number of subcarrier pulses for each bit
		000	1 pulse for each bit
		001	2 pulses for each bit
		010	4 pulses for each bit
		011	8 pulses for each bit ISO/IEC 14443 A and ISO/IEC 14443 B
		101	reserved
		110	reserved
		111	reserved
4 to 3	ISOSelection[1:0]		used to select the communication protocol
		00	reserved
		10	ISO/IEC 14443 A and ISO/IEC 14443 B
		11	reserved
2	LPOff		switches off a low-pass filter at the internal amplifier
1 to 0	Gain[1:0]		defines the receiver’s signal voltage gain factor
		00	20 dB gain factor
		01	24 dB gain factor
		10	31 dB gain factor
		11	35 dB gain factor

All information provided in this document is subject to legal disclaimers.

© NXP Semiconductors N.V. 2015. All rights reserved.

10.5.4.3 DecoderControl register

Controls decoder operation.

Table 84. DecoderControl register (address: 1Ah) reset value: 0000 1000b, 08h bit allocation

Bit	7	6	5	4	3	2	1	0
Symbol	0	RxMultiple	ZeroAfterColl	RxFraming[1:0]		00		RxCoding
Access	R/W	R/W	R/W	R/W		R/W		R/W

Table 85. DecoderControl register bit descriptions

Bit	Symbol	Value	Description
7	0	-	this value must not be changed
6	RxMultiple	0	after receiving one frame, the receiver is deactivated
		1	enables reception of more than one frame
5	ZeroAfterColl	1	any bits received after a bit-collision are masked to zero. This helps to resolve the anti-collision procedure as defined in ISO/IEC 14443 A
4 to 3	RxFraming[1:0]	01	MIFARE or ISO/IEC 14443 A
2 to 1	00	-	this value must not be changed
0	RxCoding	0	Manchester encoding
		1	BPSK encoding

10.5.4.4 BitPhase register

Selects the bit-phase between transmitter and receiver clock.

Table 86. BitPhase register (address: 1Bh) reset value: 1010 1101b, ADh bit allocation

Bit	7	6	5	4	3	2	1	0
Symbol	BitPhase[7:0]							
Access	R/W							

Table 87. BitPhase register bit descriptions

Bit	Symbol	Description
7 to 0	BitPhase	defines the phase relationship between transmitter and receiver clock **Remark:** The correct value of this register is essential for proper operation.

All information provided in this document is subject to legal disclaimers.

© NXP Semiconductors N.V. 2015. All rights reserved.

10.5.4.5 RxThreshold register

Selects thresholds for the bit decoder.

Table 88. RxThreshold register (address: 1Ch) reset value: 1111 1111b, FFh bit allocation

Bit	7	6	5	4	3	2	1	0
Symbol	MinLevel[3:0]				CollLevel[3:0]			
Access	R/W				R/W			

Table 89. RxThreshold register bit descriptions

Bit	Symbol	Description
7 to 4	MinLevel[3:0]	the minimum signal strength the decoder will accept. If the signal strength is below this level, it is not evaluated.
3 to 0	CollLevel[3:0]	the minimum signal strength the decoder input that must be reached by the weaker half-bit of the Manchester encoded signal to generate a bit-collision (relative to the amplitude of the stronger half-bit)

10.5.4.6 BPSKDemControl

Controls BPSK demodulation.

Table 90. BPSKDemControl register (address: 1Dh) reset value: 0001 1110b, 1Eh bit allocation

Bit	7	6	5	4	3	2	1	0
Symbol	NoRxSOF	NoRxEGT	NoRxEOF	FilterAmpDet	TauD[1:0]		TauB[1:0]	
Access	R/W	R/W	R/W	R/W	R/W		R/W	

Table 91. BPSKDemControl register bit descriptions

Bit	Symbol	Value	Description
7	NoRxSOF	1	a missing SOF in the received data stream is ignored and no framing errors are indicated
		0	a missing SOF in the received data stream generates framing errors
6	NoRxEGT	1	an EGT which is too short or too long in the received data stream is ignored and no framing errors are indicated
		0	an EGT which is too short or too long in the received data stream will cause framing errors
5	NoRxEOF	1	a missing EOF in the received data stream is ignored and no framing errors indicated
		0	a missing EOF in the receiving data stream produces framing errors
4	FilterAmpDet	-	switches on a high-pass filter for amplitude detection
3 to 2	TauD[1:0]	-	changes the time constant of the internal PLL whilst receiving data
1 to 0	TauB[1:0]	-	changes the time constant of the internal PLL during data bursts

All information provided in this document is subject to legal disclaimers.

© NXP Semiconductors N.V. 2015. All rights reserved.

10.5.4.7 RxControl2 register

Controls decoder behavior and defines the input source for the receiver.

Table 92. RxControl2 register (address: 1Eh) reset value: 0100 0001b, 41h bit allocation

Bit	7	6	5	4	3	2	1	0
Symbol	RcvClkSeII	RxAutoPD	0000				DecoderSource[1:0]	
Access	R/W	R/W	R/W				R/W	

Table 93. RxControl2 register bit descriptions

Bit	Symbol	Value	Description
7	RcvClkSeII	1	I-clock is used as the receiver clock[1]
		0	Q-clock is used as the receiver clock[1]
6	RxAutoPD	1	receiver circuit is automatically switched on before receiving and switched off afterwards. This can be used to reduce current consumption.
		0	receiver is always activated
5 to 2	0000	-	these values must not be changed
1 to 0	DecoderSource[1:0]		selects the source for the decoder input
		00	LOW
		01	internal demodulator
		10	a subcarrier modulated Manchester encoded signal on pin MFIN
		11	a baseband Manchester encoded signal on pin MFIN

[1] I-clock and Q-clock are 90° phase-shifted from each other.

10.5.4.8 ClockQControl register

Controls clock generation for the 90° phase-shifted Q-clock.

Table 94. ClockQControl register (address: 1Fh) reset value: 000x xxxxb, xxh bit allocation

Bit	7	6	5	4	3	2	1	0
Symbol	ClkQ180Deg	ClkQCalib	0	ClkQDelay[4:0]				
Access	R	R/W	R/W	D				

Table 95. ClockQControl register bit descriptions

Bit	Symbol	Value	Description
7	ClkQ180Deg	1	Q-clock is phase-shifted more than 180° compared to the I-clock
		0	Q-clock is phase-shifted less than 180° compared to the I-clock
6	ClkQCalib	0	Q-clock is automatically calibrated after the reset phase and after data reception from the card
		1	no calibration is performed automatically
5	0	-	this value must not be changed
4 to 0	ClkQDelay[4:0]	-	this register shows the number of delay elements used to generate a 90° phase-shift of the I-clock to obtain the Q-clock. It can be written directly by the microprocessor or by the automatic calibration cycle.

All information provided in this document is subject to legal disclaimers.

© NXP Semiconductors N.V. 2015. All rights reserved.

10.5.5 Page 4: RF Timing and channel redundancy

10.5.5.1 Page register

Selects the page register; see Section 10.5.1.1 “Page register” on page 48.

10.5.5.2 RxWait register

Selects the time interval after transmission, before the receiver starts.

Table 96. RxWait register (address: 21h) reset value: 0000 0101b, 06h bit allocation

Bit	7	6	5	4	3	2	1	0
Symbol	RxWait[7:0]							
Access	R/W							

Table 97. RxWait register bit descriptions

Bit	Symbol	Function
7 to 0	RxWait[7:0]	after data transmission, the activation of the receiver is delayed for RxWait bit-clock cycles. During this frame guard time any signal on pin RX is ignored.

10.5.5.3 ChannelRedundancy register

Selects kind and mode of checking the data integrity on the RF channel.

Table 98. ChannelRedundancy register (address: 22h) reset value: 0000 0011b, 03h bit allocation

Bit	7	6	5	4	3	2	1	0
Symbol	00		CRC3309	CRC8	RxCRCEn	TxCRCEn	ParityOdd	ParityEn
Access	R/W	R/W	R/W	R/W	R/W	R/W	R/W	R/W

Table 99. ChannelRedundancy bit descriptions

Bit	Symbol	Value	Function
7 to 6	00	-	this value must not be changed
5	CRC3309	1	CRC calculation is performed using ISO/IEC 3309 (ISO/IEC 14443 B)
		0	CRC calculation is performed using ISO/IEC 14443 A
4	CRC8	1	an 8-bit CRC is calculated
		0	a 16-bit CRC is calculated
3	RxCRCEn	1	the last byte(s) of a received frame are interpreted as CRC bytes. If the CRC is correct, the CRC bytes are not passed to the FIFO. If the CRC bytes are incorrect, the CRCErr flag is set.
		0	no CRC is expected
2	TxCRCEn	1	a CRC is calculated over the transmitted data and the CRC bytes are appended to the data stream
		0	no CRC is transmitted

All information provided in this document is subject to legal disclaimers.

© NXP Semiconductors N.V. 2015. All rights reserved.

Table 99. ChannelRedundancy bit descriptions *...continued*

Bit	Symbol	Value	Function
1	ParityOdd	1	odd parity is generated or expected[1]
		0	even parity is generated or expected
0	ParityEn	1	a parity bit is inserted in the transmitted data stream after each byte and expected in the received data stream after each byte (MIFARE, ISO/IEC 14443 A)
		0	no parity bit is inserted or expected (ISO/IEC 14443 B)

[1] When used with ISO/IEC 14443 A, this bit must be set to logic 1.

10.5.5.4 CRCPresetLSB register

LSB of the preset value for the CRC register.

Table 100. CRCPresetLSB register (address: 23h) reset value: 0101 0011b, 63h bit allocation

Bit	7	6	5	4	3	2	1	0
Symbol	CRCPresetLSB[7:0]							
Access	R/W							

Table 101. CRCPresetLSB register bit descriptions

Bit	Symbol	Description
7 to 0	CRCPresetLSB[7:0]	defines the start value for CRC calculation. This value is loaded into the CRC at the beginning of transmission, reception and the CalcCRC command (if CRC calculation is enabled).

10.5.5.5 CRCPresetMSB register

MSB of the preset value for the CRC register.

Table 102. CRCPresetMSB register (address: 24h) reset value: 0101 0011b, 63h bit allocation

Bit	7	6	5	4	3	2	1	0
Symbol	CRCPresetMSB[7:0]							
Access	R/W							

Table 103. CRCPresetMSB bit descriptions

Bit	Symbol	Description
7 to 0	CRCPresetMSB[7:0]	defines the starting value for CRC calculation. This value is loaded into the CRC at the beginning of transmission, reception and the CalcCRC command (if the CRC calculation is enabled) **Remark:** This register is not relevant if CRC8 is set to logic 1.

10.5.5.6 PreSet25 register

Table 104. PreSet25 register (address: 25h) reset value: 0000 0000b, 00h bit allocation

Bit	7	6	5	4	3	2	1	0
Symbol	0000000							
Access	RW							

Remark: These values must not be changed.

All information provided in this document is subject to legal disclaimers.

© NXP Semiconductors N.V. 2015. All rights reserved.

10.5.5.7 MFOUTSelect register

Selects the internal signal applied to pin MFOUT.

Table 105. MFOUTSelect register (address: 26h) reset value: 0000 0000b, 00h bit allocation

Bit	7	6	5	4	3	2	1	0
Symbol	00000					MFOUTSelect[2:0]		
Access	R/W					R/W		

Table 106. MFOUTSelect register bit descriptions

Bit	Symbol	Value	Description
7 to 3	00000	-	these values must not be changed
2 to 0	MFOUTSelect[2:0]		defines which signal is routed to pin MFOUT:
		000	constant LOW
		001	constant HIGH
		010	modulation signal (envelope) from the internal encoder, (Miller coded)
		011	serial data stream, not Miller encoded
		100	output signal of the energy carrier demodulator (card modulation signal)[1]
		101	output signal of the subcarrier demodulator (Manchester encoded card signal)[1]
		110	reserved
		111	reserved

[1] Only valid for MIFARE and ISO/IEC 14443 A communication at 106 kBd.

10.5.5.8 PreSet27 register

Table 107. PreSet27 (address: 27h) reset value: xxxx xxxxb, xxh bit allocation

Bit	7	6	5	4	3	2	1	0
Symbol	x	x	x	x	x	x	x	x
Access	W	W	W	W	W	W	W	W

All information provided in this document is subject to legal disclaimers.

© NXP Semiconductors N.V. 2015. All rights reserved.

10.5.6 Page 5: FIFO, timer and IRQ pin configuration

10.5.6.1 Page register

Selects the page register; see Section 10.5.1.1 “Page register” on page 48.

10.5.6.2 FIFOLevel register

Defines the levels for FIFO underflow and overflow warning.

Table 108. FIFOLevel register (address: 29h) reset value: 0000 1000b, 08h bit allocation

Bit	7	6	5	4	3	2	1	0
Symbol	00		WaterLevel[5:0]					
Access	R/W		R/W					

Table 109. FIFOLevel register bit descriptions

Bit	Symbol	Description
7 to 6	00	these values must not be changed
5 to 0	WaterLevel[5:0]	defines, the warning level of a FIFO buffer overflow or underflow: HiAlert is set to logic 1, if the remaining FIFO buffer space is equal to or less than the WaterLevel[5:0] bits in the FIFO buffer. LoAlert is set to logic 1, if equal to or less than the WaterLevel[5:0] bits in the FIFO buffer.

10.5.6.3 TimerClock register

Selects the divider for the timer clock.

Table 110. TimerClock register (address: 2Ah) reset value: 0000 0111b, 07h bit allocation

Bit	7	6	5	4	3	2	1	0
Symbol	00		TAutoRestart	TPreScaler[4:0]				
Access	RW		RW	RW				

Table 111. TimerClock register bit descriptions

Bit	Symbol	Value	Function
7 to 6	00	-	these values must not be changed
5	TAutoRestart	1	the timer automatically restarts its countdown from the TReloadValue[7:0] instead of counting down to zero
		0	the timer decrements to zero and register InterruptIrq TimerIRq bit is set to logic 1
4 to 0	TPreScaler[4:0]	-	defines the timer clock frequency ($f_{TimerClock}$). The TPreScaler[4:0] can be adjusted from 0 to 21. The following formula is used to calculate the TimerClock frequency ($f_{TimerClock}$): $f_{TimerClock} = 13.56\ MHz / 2^{TPreScaler}$ [MHz]

All information provided in this document is subject to legal disclaimers.

© NXP Semiconductors N.V. 2015. All rights reserved.

10.5.6.4 TimerControl register

Selects start and stop conditions for the timer.

Table 112. TimerControl register (address: 2Bh) reset value: 0000 0110b, 06h bit allocation

Bit	7	6	5	4	3	2	1	0
Symbol	0000				TStopRxEnd	TStopRxBegin	TStartTxEnd	TStartTxBegin
Access	R/W				R/W	R/W	R/W	R/W

Table 113. TimerControl register bit descriptions

Bit	Symbol	Value	Description
7 to 4	0000	-	these values must not be changed
3	TStopRxEnd	1	the timer automatically stops when data reception ends
		0	the timer is not influenced by this condition
2	TStopRxBegin	1	the timer automatically stops when the first valid bit is received
		0	the timer is not influenced by this condition
1	TStartTxEnd	1	the timer automatically starts when data transmission ends. If the timer is already running, the timer restarts by loading TReloadValue[7:0] into the timer.
		0	the timer is not influenced by this condition
0	TStartTxBegin	1	the timer automatically starts when the first bit is transmitted. If the timer is already running, the timer restarts by loading TReloadValue[7:0] into the timer.
		0	the timer is not influenced by this condition

10.5.6.5 TimerReload register

Defines the preset value for the timer.

Table 114. TimerReload register (address: 2Ch) reset value: 0000 1010b, 0Ah bit allocation

Bit	7	6	5	4	3	2	1	0
Symbol	TReloadValue[7:0]							
Access	R/W							

Table 115. TimerReload register bit descriptions

Bit	Symbol	Description
7 to 0	TReloadValue[7:0]	on a start event, the timer loads the TReloadValue[7:0] value. Changing this register only affects the timer on the next start event. If TReloadValue[7:0] is set to logic 0 the timer cannot start.

All information provided in this document is subject to legal disclaimers.

© NXP Semiconductors N.V. 2015. All rights reserved.

10.5.6.6 IRQPinConfig register

Configures the output stage for pin IRQ.

Table 116. IRQPinConfig register (address: 2Dh) reset value: 0000 0010b, 02h bit allocation

Bit	7	6	5	4	3	2	1	0
Symbol	000000						IRQInv	IRQPushPull
Access	R/W						R/W	R/W

Table 117. IRQPinConfig register bit descriptions

Bit	Symbol	Value	Description
7 to 2	000000	-	these values must not be changed
1	IRQInv	1	inverts the signal on pin IRQ with respect to bit IRq
		0	the signal on pin IRQ is not inverted and is the same as bit IRq
0	IRQPushPull	1	pin IRQ functions as a standard CMOS output pad
		0	pin IRQ functions as an open-drain output pad

10.5.6.7 PreSet2E register

Table 118. PreSet2E register (address: 2Eh) reset value: xxxx xxxxb, xxh bit allocation

Bit	7	6	5	4	3	2	1	0
Symbol	x	x	x	x	x	x	x	x
Access	W	W	W	W	W	W	W	W

10.5.6.8 PreSet2F register

Table 119. PreSet2F register (address: 2Fh) reset value: xxxx xxxxb, xxh bit allocation

Bit	7	6	5	4	3	2	1	0
Symbol	x	x	x	x	x	x	x	x
Access	W	W	W	W	W	W	W	W

10.5.7 Page 6: reserved

10.5.7.1 Page register

Selects the page register; see Section 10.5.1.1 “Page register” on page 48.

10.5.7.2 Reserved registers 31h, 32h, 33h, 34h, 35h, 36h and 37h

Table 120. Reserved registers (address: 31h, 32h, 33h, 34h, 35h, 36h, 37h) reset value: xxxx xxxxb, xxh bit allocation

Bit	7	6	5	4	3	2	1	0
Symbol	x	x	x	x	x	x	x	x
Access	R/W	R/W	R/W	R/W	R/W	R/W	R/W	R/W

Remark: These registers are reserved for future use.

All information provided in this document is subject to legal disclaimers.

© NXP Semiconductors N.V. 2015. All rights reserved.

10.5.8 Page 7: Test control

10.5.8.1 Page register

Selects the page register; see Section 10.5.1.1 “Page register” on page 48.

10.5.8.2 Reserved register 39h

Table 121. Reserved register (address: 39h) reset value: xxxx xxxxb, xxh bit allocation

Bit	7	6	5	4	3	2	1	0
Symbol	x	x	x	x	x	x	x	x
Access	W	W	W	W	W	W	W	W

Remark: This register is reserved for future use.

10.5.8.3 TestAnaSelect register

Selects analog test signals.

Table 122. TestAnaSelect register (address: 3Ah) reset value: 0000 0000b, 00h bit allocation

Bit	7	6	5	4	3	2	1	0
Symbol	0000				TestAnaOutSel[4:0]			
Access	W				W			

Table 123. TestAnaSelect bit descriptions

Bit	Symbol	Value	Description
7 to 4	0000	-	these values must not be changed
3 to 0	TestAnaOutSel[4:0]		selects the internal analog signal to be routed to pin AUX. See Section 15.2.2 on page 103 for detailed information. The settings are as follows:
		0	VMID
		1	Vbandgap
		2	VRxFollI
		3	VRxFollQ
		4	VRxAmpI
		5	VRxAmpQ
		6	VCorrNI
		7	VCorrNQ
		8	VCorrDI
		9	VCorrDQ
		A	VEvalL
		B	VEvalR
		C	VTemp
		D	reserved
		E	reserved
		F	reserved

All information provided in this document is subject to legal disclaimers.

© NXP Semiconductors N.V. 2015. All rights reserved.

10.5.8.4 Reserved register 3Bh

Table 124. Reserved register (address: 3Bh) reset value: xxxx xxxxb, xxh bit allocation

Bit	7	6	5	4	3	2	1	0
Symbol	x	x	x	x	x	x	x	x
Access	W	W	W	W	W	W	W	W

Remark: This register is reserved for future use.

10.5.8.5 Reserved register 3Ch

Table 125. Reserved register (address: 3Ch) reset value: xxxx xxxxb, xxh bit allocation

Bit	7	6	5	4	3	2	1	0
Symbol	x	x	x	x	x	x	x	x
Access	W	W	W	W	W	W	W	W

Remark: This register is reserved for future use.

10.5.8.6 TestDigiSelect register

Selects digital test mode.

Table 126. TestDigiSelect register (address: 3Dh) reset value: xxxx xxxxb, xxh bit allocation

Bit	7	6	5	4	3	2	1	0
Symbol	SignalToMFOUT	TestDigiSignalSel[6:0]						
Access	W	W						

Table 127. TestDigiSelect register bit descriptions

Bit	Symbol	Value	Description
7	SignalToMFOUT	1	overrules the MFOUTSelect[2:0] setting and routes the digital test signal defined with the TestDigiSignalSel[6:0] bits to pin MFOUT
		0	MFOUTSelect[2:0] defines the signal on pin MFOUT
6 to 0	TestDigiSignalSel[6:0]	-	selects the digital test signal to be routed to pin MFOUT. Refer to Section 15.2.3 on page 104 for detailed information. The following lists the signal names for the TestDigiSignalSel[6:0] addresses:
		F4h	s_data
		E4h	s_valid
		D4h	s_coll
		C4h	s_clock
		B5h	rd_sync
		A5h	wr_sync
		96h	int_clock
		83h	BPSK_out
		E2h	BPSK_sig

All information provided in this document is subject to legal disclaimers.

© NXP Semiconductors N.V. 2015. All rights reserved.

10.5.8.7 Reserved registers 3Eh, 3Fh

Table 128. Reserved register (address: 3Eh, 3Fh) reset value: xxxx xxxxb, xxh bit allocation

Bit	7	6	5	4	3	2	1	0
Symbol	x	x	x	x	x	x	x	x
Access	W	W	W	W	W	W	W	W

Remark: This register is reserved for future use.

11. MFRC531 command set

MFRC531 operation is determined by an internal state machine capable of performing a command set. The commands can be started by writing the command code to the Command register. Arguments and/or data necessary to process a command are mainly exchanged using the FIFO buffer.

- Each command needing a data stream (or data byte stream) as an input immediately processes the data in the FIFO buffer
- Each command that requires arguments only starts processing when it has received the correct number of arguments from the FIFO buffer
- The FIFO buffer is not automatically cleared at the start of a command. It is, therefore, possible to write command arguments and/or the data bytes into the FIFO buffer before starting a command.
- Each command (except the StartUp command) can be interrupted by the microprocessor writing a new command code to the Command register e.g. the Idle command.

11.1 MFRC531 command overview

Table 129. MFRC531 commands overview

Command	Value	Action	FIFO communication	
			Arguments and data sent	Data received
StartUp	3Fh	runs the reset and initialization phase. See Section 11.1.2 on page 75. **Remark:** This command can only be activated by Power-On or Hard resets.	-	-
Idle	00h	no action; cancels execution of the current command. See Section 11.1.3 on page 75	-	-
Transmit	1Ah	transmits data from the FIFO buffer to the card. See Section 11.2.1 on page 76	data stream	-
Receive	16h	activates receiver circuitry. Before the receiver starts, the state machine waits until the time defined in the RxWait register has elapsed. See Section 11.2.2 on page 79. **Remark:** This command may be used for test purposes only, since there is no timing relationship to the Transmit command.	-	data stream

All information provided in this document is subject to legal disclaimers.

© NXP Semiconductors N.V. 2015. All rights reserved.

Table 129. MFRC531 commands overview *...continued*

Command	Value	Action	FIFO communication	
			Arguments and data sent	**Data received**
Transceive[1]	1Eh	transmits data from FIFO buffer to the card and automatically activates the receiver after transmission. The receiver waits until the time defined in the RxWait register has elapsed before starting. See Section 11.2.3 on page 82.	data stream	data stream
WriteE2	01h	reads data from the FIFO buffer and writes it to the EEPROM. See Section 11.3.1 on page 84.	start address LSB	-
			start address MSB	
			data byte stream	
ReadE2	03h	reads data from the EEPROM and sends it to the FIFO buffer. See Section 11.3.2 on page 86. **Remark:** Keys cannot be read back	start address LSB	data bytes
			start address MSB	
			number of data bytes	
LoadKeyE2	0Bh	copies a key from the EEPROM into the key buffer[2] See Section 11.6.1 on page 88.	start address LSB	-
			start address MSB	
LoadKey	19h	reads a key from the FIFO buffer and loads it into the key buffer[2]. See Section 11.6.2 on page 88. **Remark:** The key has to be prepared in a specific format (refer to Section 9.2.3.1 “Key format” on page 16)	byte 0 LSB	-
			byte 1	
			…	
			byte 10	
			byte 11 MSB	
Authent1	0Ch	performs the first part of card authentication using the Crypto1 algorithm[2]. See Section 11.6.3 on page 89.	card Authent1 command	-
			card block address	
			card serial number	
			LSB	
			card serial number	
			byte 1	
			card serial number	
			byte 2	
			card serial number	
			MSB	
Authent2	14h	performs the second part of card authentication using the Crypto1 algorithm[2]. See Section 11.6.4 on page 89.	-	-
LoadConfig	07h	reads data from EEPROM and initializes the MFRC531 registers. See Section 11.4.1 on page 86.	start address LSB	-
			start address MSB	
CalcCRC	12h	activates the CRC coprocessor **Remark:** The result of the CRC calculation is read from the CRCResultLSB and CRCResultMSB registers. See Section 11.4.2 on page 87.	data byte stream	-

[1] This command is the combination of the Transmit and Receive commands.

[2] Relates to MIFARE Mini/MIFARE 1K/MIFARE 4K security.

All information provided in this document is subject to legal disclaimers.

© NXP Semiconductors N.V. 2015. All rights reserved.

11.1.1 Basic states

11.1.2 StartUp command 3Fh

Table 130. StartUp command 3Fh

Command	Value	Action	Arguments and data	Returned data
StartUp	3Fh	runs the reset and initialization phase	-	-

Remark: This command can only be activated by a Power-On or Hard reset.

The StartUp command runs the reset and initialization phases. It does not need or return, any data. It cannot be activated by the microprocessor but is automatically started after one of the following events:

- Power-On Reset (POR) caused by power-up on pin DVDD
- POR caused by power-up on pin AVDD
- Negative edge on pin RSTPD

The reset phase comprises an asynchronous reset and configuration of certain register bits. The initialization phase configures several registers with values stored in the EEPROM.

When the StartUp command finishes, the Idle command is automatically executed.

Remark:

- The microprocessor must not write to the MFRC531 while it is still executing the StartUp command. To avoid this, the microprocessor polls for the Idle command to determine when the initialization phase has finished; see Section 9.7.4 on page 28.
- When the StartUp command is active, it is only possible to read from the Page 0 register.
- The StartUp command cannot be interrupted by the microprocessor.

11.1.3 Idle command 00h

Table 131. Idle command 00h

Command	Value	Action	Arguments and data	Returned data
Idle	00h	no action; cancels current command execution	-	-

The Idle command switches the MFRC531 to its inactive state where it waits for the next command. It does not need or return, any data.

The device automatically enters the idle state when a command finishes. When this happens, the MFRC531 sends an interrupt request by setting bit IdleIRq. When triggered by the microprocessor, the Idle command can be used to stop execution of all other commands (except the StartUp command) but this does not generate an interrupt request (IdleIRq).

Remark: Stopping command execution with the Idle command does not clear the FIFO buffer.

All information provided in this document is subject to legal disclaimers.

© NXP Semiconductors N.V. 2015. All rights reserved.

11.2 Commands for ISO/IEC 14443 A card communication

The MFRC531 is a fully ISO/IEC 14443 A and ISO/IEC 14443 B compliant reader IC. This enables the command set to be more flexible and generalized when compared to dedicated MIFARE reader ICs. Section 11.2.1 to Section 11.2.5 describe the command set for ISO/IEC 14443 A card communication and related communication protocols.

11.2.1 Transmit command 1Ah

Table 132. Transmit command 1Ah

Command	Value	Action	Arguments and data	Returned data
Transmit	1Ah	transmits data from FIFO buffer to card	data stream	-

The Transmit command reads data from the FIFO buffer and sends it to the transmitter. It does not return any data. The Transmit command can only be started by the microprocessor.

11.2.1.1 Using the Transmit command

To transmit data, one of the following sequences can be used:

1. All data to be transmitted to the card is written to the FIFO buffer while the Idle command is active. Then the command code for the Transmit command is written to the Command register.

   Remark: This is possible for transmission of a data stream up to 64 bytes.

2. The command code for the Transmit command is stored in the Command register. Since there is not any data available in the FIFO buffer, the command is only enabled but transmission is not activated. Data transmission starts when the first data byte is written to the FIFO buffer. To generate a continuous data stream on the RF interface, the microprocessor must write the subsequent data bytes into the FIFO buffer in time.

   Remark: This allows transmission of any data stream length but it requires data to be written to the FIFO buffer in time.

3. Part of the data transmitted to the card is written to the FIFO buffer while the Idle command is active. Then the command code for the Transmit command is written to the Command register. While the Transmit command is active, the microprocessor can send further data to the FIFO buffer. This is then appended by the transmitter to the transmitted data stream.

   Remark: This allows transmission of any data stream length but it requires data to be written to the FIFO buffer in time.

When the transmitter requests the next data byte to ensure the data stream on the RF interface is continuous and the FIFO buffer is empty, the Transmit command automatically terminates. This causes the internal state machine to change its state from transmit to idle.

When the data transmission to the card is finished, the TxIRq flag is set by the MFRC531 to indicate to the microprocessor transmission is complete.

Remark: If the microprocessor overwrites the transmit code in the Command register with another command, transmission stops immediately on the next clock cycle. This can produce output signals that are not in accordance with ISO/IEC 14443 A.

All information provided in this document is subject to legal disclaimers.

© NXP Semiconductors N.V. 2015. All rights reserved.

11.2.1.2 RF channel redundancy and framing

Each ISO/IEC 14443 A transmitted frame consists of a Start Of Frame (SOF) pattern, followed by the data stream and is closed by an End Of Frame (EOF) pattern. These different phases of the transmission sequence can be monitored using the PrimaryStatus register ModemState[2:0] bit; see Section 11.2.4 on page 82.

Depending on the setting of the ChannelRedundancy register bit TxCRCEn, the CRC is calculated and appended to the data stream. The CRC is calculated according to the settings in the ChannelRedundancy register. Parity generation is handled according to the ChannelRedundancy register ParityEn and ParityOdd bits settings.

11.2.1.3 Transmission of bit oriented frames

The transmitter can be configured to send an incomplete last byte. To achieve this the BitFraming register's TxLastBits[2:0] bits must be set at above zero (for example, 1). This is shown in Figure 15.

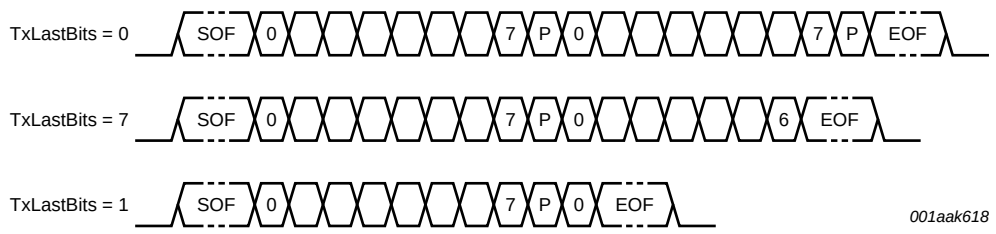

Fig 15. Transmitting bit oriented frames

Figure 15 shows the data stream if bit ParityEn is set in the ChannelRedundancy register. All fully transmitted bytes are followed by a parity check bit but the incomplete byte is not followed by a parity check bit. After transmission, the TxLastBits[2:0] bits are automatically cleared.

Remark: If the TxLastBits[2:0] bits are not equal to zero, CRC generation must be disabled. This is done by clearing the ChannelRedundancy register TxCRCEn bit.

11.2.1.4 Transmission of frames with more than 64 bytes

To generate frames of more than 64 bytes, the microprocessor must write data to the FIFO buffer while the Transmit command is active. The state machine checks the FIFO buffer status when it starts transmitting the last bit of the data stream; the check time is marked in Figure 16 with arrows.

All information provided in this document is subject to legal disclaimers.

© NXP Semiconductors N.V. 2015. All rights reserved.

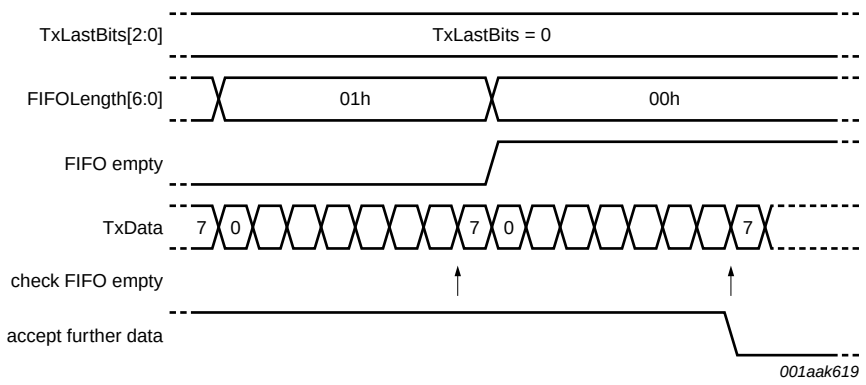

Fig 16. Timing for transmitting byte oriented frames

As long as the internal accept further data signal is logic 1, further data can be written to the FIFO buffer. The MFRC531 appends this data to the data stream transmitted using the RF interface.

If the internal accept further data signal is logic 0, the transmission terminates. All data written to the FIFO buffer after accept further data signal was set to logic 0 is not transmitted, however, it remains in the FIFO buffer.

Remark: If parity generation is enabled (ParityEn = logic 1), the parity bit is the last bit transmitted. This delays the accept further data signal by a duration of one bit.

If the TxLastBits[2:0] bits are not zero, the last byte is not transmitted completely. Only the number of bits set by TxLastBits[2:0], starting with the least significant bit are transmitted. This means that the internal state machine has to check the FIFO buffer status at an earlier point in time; see Figure 17.

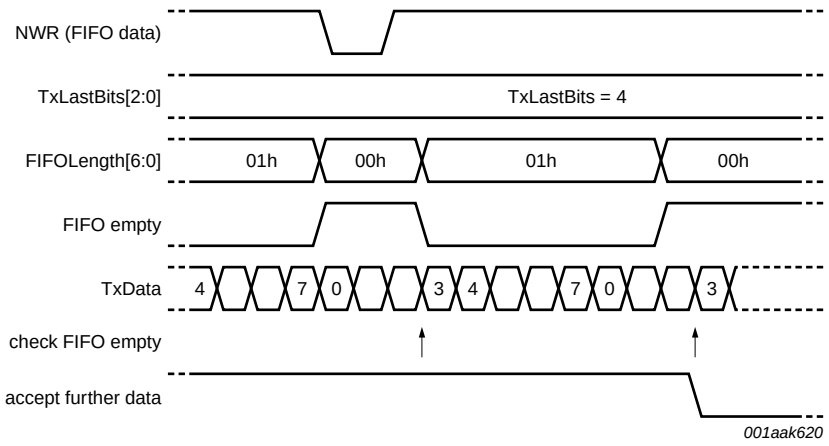

Fig 17. Timing for transmitting bit oriented frames

Since in this example TxLastBits[2:0] = 4, transmission stops after bit 3 is transmitted and the frame is completed with an EOF, if configured.

All information provided in this document is subject to legal disclaimers.

© NXP Semiconductors N.V. 2015. All rights reserved.

Figure 17 also shows write access to the FIFOData register just before the FIFO buffer's status is checked. This leads to FIFO empty state being held LOW which keeps the accept further data active. The new byte written to the FIFO buffer is transmitted using the RF interface.

Accept further data is only changed by the check FIFO empty function. This function verifies FIFO empty for one bit duration before the last expected bit transmission.

Table 133. Transmission of frames of more than 64 bytes

Frame definition	Verification at:
8-bit with parity	8th bit
8-bit without parity	7th bit
x-bit without parity	$(x – 1)^{th}$ bit

11.2.2 Receive command 16h

Table 134. Receive command 16h

Command	Value	Action	Arguments and data	Returned data
Receive	16h	activates receiver circuitry	-	data stream

The Receive command activates the receiver circuitry. All data received from the RF interface is written to the FIFO buffer. The Receive command can be started either using the microprocessor or automatically during execution of the Transceive command.

Remark: This command can only be used for test purposes since there is no timing relationship to the Transmit command.

11.2.2.1 Using the Receive command

After starting the Receive command, the internal state machine decrements to the RxWait register value on every bit-clock. The analog receiver circuitry is prepared and activated from 3 down to 1. When the counter reaches 0, the receiver starts monitoring the incoming signal at the RF interface.

When the signal strength reaches a level higher than the RxThreshold register MinLevel[3:0] bits value, it starts decoding. The decoder stops when the signal can no longer be detected on the receiver input pin RX. The decoder sets bit RxIRq indicating receive termination.

The different phases of the receive sequence are monitored using the PrimaryStatus register ModemState[2:0] bits; see Section 11.2.4 on page 82.

Remark: Since the counter values from 3 to 0 are needed to initialize the analog receiver circuitry, the minimum value for RxWait[7:0] is 3.

11.2.2.2 RF channel redundancy and framing

The decoder expects the SOF pattern at the beginning of each data stream. When the SOF is detected, it activates the serial-to-parallel converter and gathers the incoming data bits. Every completed byte is forwarded to the FIFO buffer.

All information provided in this document is subject to legal disclaimers.

© NXP Semiconductors N.V. 2015. All rights reserved.

If an EOF pattern is detected or the signal strength falls below the RxThreshold register MinLevel[3:0] bits setting, both the receiver and the decoder stop. Then the Idle command is entered and an appropriate response for the microprocessor is generated (interrupt request activated, status flags set).

When the ChannelRedundancy register bit RxCRCEn is set, a CRC block is expected. The CRC block can be one byte or two bytes depending on the ChannelRedundancy register CRC8 bit setting.

Remark: If the CRC block received is correct, it is not sent to the FIFO buffer. This is realized by shifting the incoming data bytes through an internal buffer of either one or two bytes (depending on the defined CRC). The CRC block remains in this internal buffer. Consequently, all data bytes in the FIFO buffer are delayed by one or two bytes. If the CRC fails, all received bytes are sent to the FIFO buffer including the faulty CRC.

If ParityEn is set in the ChannelRedundancy register, a parity bit is expected after each byte. If ParityOdd = logic 1, the expected parity is odd, otherwise even parity is expected.

11.2.2.3 Collision detection

If more than one card is within the RF field during the card selection phase, they both respond simultaneously. The MFRC531 supports the algorithm defined in ISO/IEC 14443 A to resolve card serial number data collisions by performing the anti-collision procedure. The basis for this procedure is the ability to detect bit-collisions.

Bit-collision detection is supported by the Manchester coding bit encoding scheme used in the MFRC531. If in the first and second half-bit of a subcarrier, modulation is detected, instead of forwarding a 1-bit or 0-bit, a bit-collision is indicated. The MFRC531 uses the RxThreshold register CollLevel[3:0] bits setting to distinguish between a 1-bit or 0-bit and a bit-collision. If the amplitude of the half-bit with smaller amplitude is larger than that defined by the CollLevel[3:0] bits, the MFRC531 flags a bit-collision using the error flag CollErr. If a bit-collision is detected in a parity bit, the ParityErr flag is set.

On a detected collision, the receiver continues receiving the incoming data stream. In the case of a bit-collision, the decoder sends logic 1 at the collision position.

Remark: As an exception, if bit ZeroAfterColl is set, all bits received after the first bit-collision are forced to zero, regardless whether a bit-collision or an unequivocal state has been detected. This feature makes it easier for the control software to perform the anti-collision procedure as defined in ISO/IEC 14443 A.

When the first bit collision in a frame is detected, the bit-collision position is stored in the CollPos register.

Table 135 shows the collision positions.

All information provided in this document is subject to legal disclaimers.

© NXP Semiconductors N.V. 2015. All rights reserved.

Table 135. Return values for bit-collision positions

Collision in bit	CollPos register value (Decimal)
SOF	0
Least Significant Bit (LSB) of the Least Significant Byte (LSByte)	1
…	…
Most Significant Bit (MSB) of the LSByte	8
LSB of second byte	9
…	…
MSB of second byte	16
LSB of third byte	17
…	…

Parity bits are not counted in the CollPos register because bit-collisions in parity bit occur after bit-collisions in the data bits. If a collision is detected in the SOF, a frame error is flagged and no data is sent to the FIFO buffer. In this case, the receiver continues to monitor the incoming signal. It generates the correct notifications to the microprocessor when the end of the faulty input stream is detected. This helps the microprocessor to determine when it is next allowed to send data to the card.

11.2.2.4 Receiving bit oriented frames

The receiver can manage byte streams with incomplete bytes which result in bit-oriented frames. To support this, the following values may be used:

- BitFraming register's RxAlign[2:0] bits select a bit offset for the first incoming byte. For example, if RxAlign[2:0] = 3, the first 5 bits received are forwarded to the FIFO buffer. Further bits are packed into bytes and forwarded. After reception, RxAlign[2:0] is automatically cleared. If RxAlign[2:0] = logic 0, all incoming bits are packed into one byte.
- RxLastBits[2:0] returns the number of bits valid in the last received byte. For example, if RxLastBits[2:0] evaluates to 5 bits at the end of the received command, the 5 least significant bits are valid. If the last byte is complete, RxLastBits[2:0] evaluates to zero.

RxLastBits[2:0] is only valid if a frame error is not indicated by the FramingErr flag. If RxAlign[2:0] is not zero and ParityEn is active, the first parity bit is ignored and not checked.

11.2.2.5 Communication errors

The events which can set error flags are shown in Table 136.

Table 136. Communication error table

Cause	Flag bit
Received data did not start with the SOF pattern	FramingErr
CRC block is not equal to the expected value	CRCErr
Received data is shorter than the CRC block	CRCErr
The parity bit is not equal to the expected value (i.e. a bit-collision, not parity)	ParityErr
A bit-collision is detected	CollErr

All information provided in this document is subject to legal disclaimers.

© NXP Semiconductors N.V. 2015. All rights reserved.

11.2.3 Transceive command 1Eh

Table 137. Transceive command 1Eh

Command	Value	Action	Arguments and data	Returned data
Transceive	1Eh	transmits data from FIFO buffer to the card and then automatically activates the receiver	data stream	data stream

The Transceive command first executes the Transmit command (see Section 11.2.1 on page 76) and then starts the Receive command (see Section 11.2.2 on page 79). All data transmitted is sent using the FIFO buffer and all data received is written to the FIFO buffer. The Transceive command can only be started by the microprocessor.

Remark: To adjust the timing relationship between transmitting and receiving, use the RxWait register. This register is used to define the time delay between the last bit transmitted and activation of the receiver. In addition, the BitPhase register determines the phase-shift between the transmitter and receiver clock.

11.2.4 States of the card communication

The status of the transmitter and receiver state machine can be read from bits ModemState[2:0] in the PrimaryStatus register.

The assignment of ModemState[2:0] to the internal action is shown in Table 138.

Table 138. Meaning of ModemState

ModemState [2:0]	State	Description
000	Idle	transmitter and/or receiver are not operating
001	TxSOF	transmitting the SOF pattern
010	TxData	transmitting data from the FIFO buffer (or redundancy CRC check bits)
011	TxEOF	transmitting the EOF pattern
100	GoToRx1	intermediate state passed, when receiver starts
	GoToRx2	intermediate state passed, when receiver finishes
101	PrepareRx	waiting until the RxWait register time period expires
110	AwaitingRx	receiver activated; waiting for an input signal on pin RX

All information provided in this document is subject to legal disclaimers.

© NXP Semiconductors N.V. 2015. All rights reserved.

11.2.5 Card communication state diagram

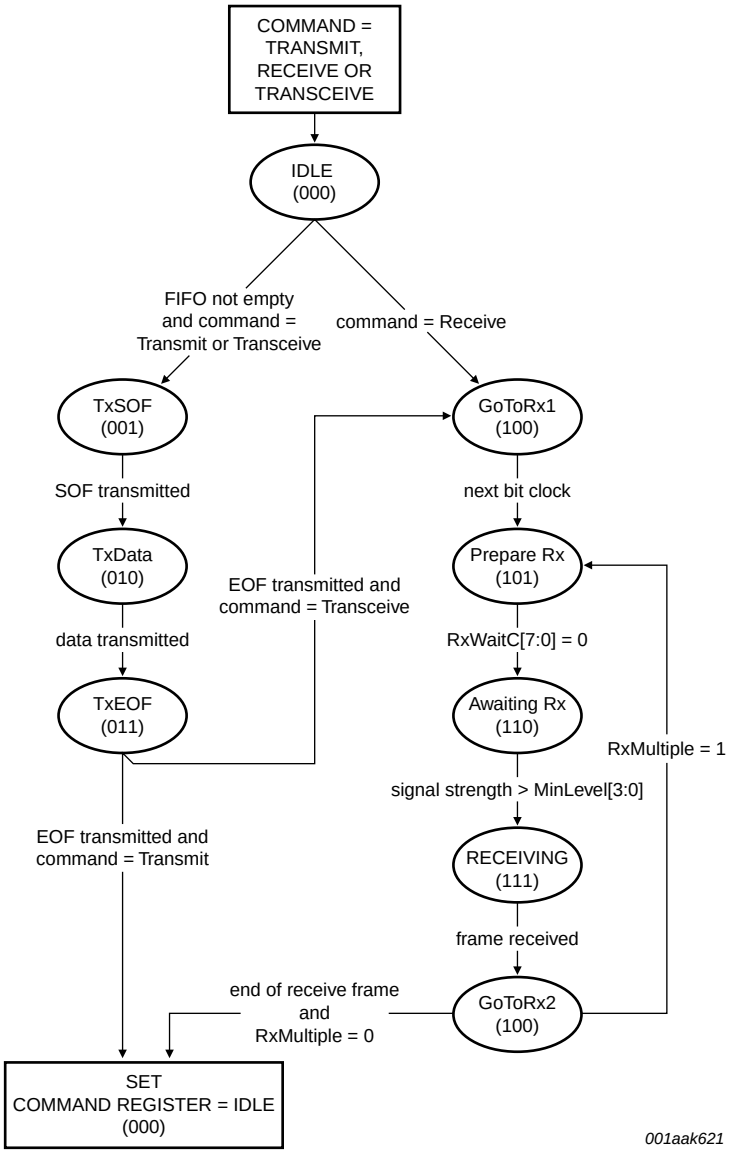

Fig 18. Card communication state diagram

All information provided in this document is subject to legal disclaimers.

© NXP Semiconductors N.V. 2015. All rights reserved.

11.3 EEPROM commands

11.3.1 WriteE2 command 01h

Table 139. WriteE2 command 01h

Command	Value	Action	FIFO	
			Arguments and data	Returned data
WriteE2	01h	get data from FIFO buffer and write it to the EEPROM	start address LSB	-
			start address MSB	-
			data byte stream	-

The WriteE2 command interprets the first two bytes in the FIFO buffer as the EEPROM start byte address. Any further bytes are interpreted as data bytes and are programmed into the EEPROM, starting from the given EEPROM start byte address. This command does not return any data.

The WriteE2 command can only be started by the microprocessor. It will not stop automatically but has to be stopped explicitly by the microprocessor by issuing the Idle command.

11.3.1.1 Programming process

Up to 16 bytes can be programmed into the EEPROM during a single programming cycle. The time needed is approximately 5.8 ms.

The state machine copies all the prepared data bytes to the FIFO buffer and then to the EEPROM input buffer. The internal EEPROM input buffer is 16 bytes long which is equal to the block size of the EEPROM. A programming cycle is started if the last position of the EEPROM input buffer is written or if the last byte of the FIFO buffer has been read.

The E2Ready flag remains logic 0 when there are unprocessed bytes in the FIFO buffer or the EEPROM programming cycle is still in progress. When all the data from the FIFO buffer are programmed into the EEPROM, the E2Ready flag is set to logic 1. Together with the rising edge of E2Ready, the TxIRq interrupt request flag shows logic 1. This can be used to generate an interrupt when programming of all data is finished.

Remark: During the E2PROM programming indicated by E2Ready = logic 0, the WriteE2 command cannot be stopped using any other command.

Once E2Ready = logic 1, the WriteE2 command can be stopped by the microprocessor by sending the Idle command.

All information provided in this document is subject to legal disclaimers.

© NXP Semiconductors N.V. 2015. All rights reserved.

11.3.1.2 Timing diagram

Figure 19 shows programming five bytes into the EEPROM.

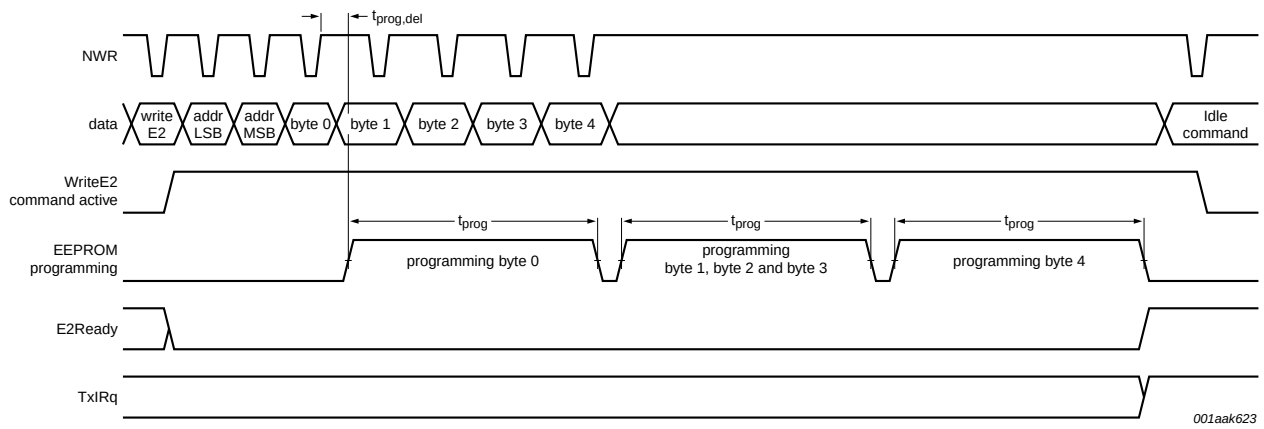

Fig 19. EEPROM programming timing diagram

Assuming that the MFRC531 finds and reads byte 0 before the microprocessor is able to write byte 1 ($t_{prog,del}$ = 300 ns). This causes the MFRC531 to start the programming cycle (t_{prog}), which takes approximately 5.8 ms to complete. In the meantime, the microprocessor stores byte 1 to byte 4 in the FIFO buffer.

If the EEPROM start byte address is 16Ch then byte 0 is stored at that address. The MFRC531 copies the subsequent data bytes into the EEPROM input buffer. Whilst copying byte 3, it detects that this data byte has to be programmed at the EEPROM byte address 16Fh. As this is the end of the memory block, the MFRC531 automatically starts a programming cycle.

Next, byte 4 is programmed at the EEPROM byte address 170h. As this is the last data byte, the E2Ready and TxIRq flags are set indicating the end of the EEPROM programming activity.

Although all data has been programmed into the E2PROM, the MFRC531 stays in the WriteE2 command. Writing more data to the FIFO buffer would lead to another EEPROM programming cycle continuing from EEPROM byte address 171h. The command is stopped using the Idle command.

11.3.1.3 WriteE2 command error flags

Programming is restricted for EEPROM block 0 (EEPROM byte address 00h to 0Fh). If you program these addresses, the AccessErr flag is set and a programming cycle is not started.

Addresses above 1FFh are taken modulo 200h; see Section 9.2 on page 12 for the EEPROM memory organization.

All information provided in this document is subject to legal disclaimers.

© NXP Semiconductors N.V. 2015. All rights reserved.

11.3.2 ReadE2 command 03h

Table 140. ReadE2 command 03h

Command	Value	Action	Arguments	Returned data
ReadE2	03h	reads EEPROM data and stores it in the FIFO buffer	start address LSB	data bytes
			start address MSB	
			number of data bytes	

The ReadE2 command interprets the first two bytes stored in the FIFO buffer as the EEPROM starting byte address. The next byte specifies the number of data bytes returned.

When all three argument bytes are available in the FIFO buffer, the specified number of data bytes are copied from the EEPROM into the FIFO buffer, starting from the given EEPROM starting byte address.

The ReadE2 command can only be triggered by the microprocessor and it automatically stops when all data has been copied.

11.3.2.1 ReadE2 command error flags

Reading is restricted to EEPROM blocks 8h to 1Fh (key memory area). Reading from these addresses sets the flag AccessErr = logic 1.

Addresses above 1FFh are taken as modulo 200h; see Section 9.2 on page 12 for the EEPROM memory organization.

11.4 Diverse commands

11.4.1 LoadConfig command 07h

Table 141. LoadConfig command 07h

Command	Value	Action	Arguments and data	Returned data
LoadConfig	07h	reads data from EEPROM and initializes the registers	start address LSB	-
			start address MSB	-

The LoadConfig command interprets the first two bytes found in the FIFO buffer as the EEPROM starting byte address. When the two argument bytes are available in the FIFO buffer, 32 bytes from the EEPROM are copied into the Control and other relevant registers, starting at the EEPROM starting byte address. The LoadConfig command can only be started by the microprocessor and it automatically stops when all relevant registers have been copied.

11.4.1.1 Register assignment

The 32 bytes of EEPROM content are written to the MFRC531 registers 10h to register 2Fh; see Section 9.2 on page 12 for the EEPROM memory organization.

Remark: The procedure for the register assignment is the same as it is for the startup initialization (see Section 9.7.3 on page 28). The difference is, the EEPROM starting byte address for the StartUp initialization is fixed to 10h (block 1, byte 0). However, it can be chosen with the LoadConfig command.

All information provided in this document is subject to legal disclaimers.

© NXP Semiconductors N.V. 2015. All rights reserved.

11.4.1.2 Relevant LoadConfig command error flags

Valid EEPROM starting byte addresses are between 10h and 60h.

Copying from block 8h to 1Fh (keys) is restricted. Reading from these addresses sets the flag AccessErr = logic 1.

Addresses above 1FFh are taken as modulo 200h; see Section 9.2 on page 12 for the EEPROM memory organization.

11.4.2 CalcCRC command 12h

Table 142. CalcCRC command 12h

Command	Value	Action	Arguments and data	Returned data
CalcCRC	12h	activates the CRC coprocessor	data byte stream	-

The CalcCRC command takes all the data from the FIFO buffer as the input bytes for the CRC coprocessor. All data stored in the FIFO buffer before the command is started is processed.

This command does not return any data to the FIFO buffer but the content of the CRC can be read using the CRCResultLSB and CRCResultMSB registers.

The CalcCRC command can only be started by the microprocessor and it does not automatically stop. It must be stopped by the microprocessor sending the Idle command. If the FIFO buffer is empty, the CalcCRC command waits for further input before proceeding.

11.4.2.1 CRC coprocessor settings

Table 143 shows the parameters that can be configured for the CRC coprocessor.

Table 143. CRC coprocessor parameters

Parameter	Value	Bit	Register
CRC register length	8-bit or 16-bit CRC	CRC8	ChannelRedundancy
CRC algorithm	ISO/IEC 14443 A or ISO/IEC 3309	CRC3309	ChannelRedundancy
CRC preset value	any	CRCPresetLSB	CRCPresetLSB
		CRCPresetMSB	CRCPresetMSB

The CRC polynomial for the 8-bit CRC is fixed to $x^8 + x^4 + x^3 + x^2 + 1$.

The CRC polynomial for the 16-bit CRC is fixed to $x^{16} + x^{12} + x^5 + 1$.

11.4.2.2 CRC coprocessor status flags

The CRCReady status flag indicates that the CRC coprocessor has finished processing all the data bytes in the FIFO buffer. When the CRCReady flag is set to logic 1, an interrupt is requested which sets the TxIRq flag. This supports interrupt driven use of the CRC coprocessor.

When CRCReady and TxIRq flags are set to logic 1 the content of the CRCResultLSB and CRCResultMSB registers and the CRCErr flag are valid. The CRCResultLSB and CRCResultMSB registers hold the content of the CRC, the CRCErr flag indicates CRC validity for the processed data.

All information provided in this document is subject to legal disclaimers.

© NXP Semiconductors N.V. 2015. All rights reserved.

11.5 Error handling during command execution

If an error is detected during command execution, the PrimaryStatus register Err flag is set. The microprocessor can evaluate the status flags in the ErrorFlag register to get information about the cause of the error.

Table 144. ErrorFlag register error flags overview

Error flag	Related commands
KeyErr	LoadKeyE2, LoadKey
AccessErr	WriteE2, ReadE2, LoadConfig
FIFOOvlf	no specific commands
CRCErr	Receive, Transceive, CalcCRC
FramingErr	Receive, Transceive
ParityErr	Receive, Transceive
CollErr	Receive, Transceive

11.6 MIFARE security commands

11.6.1 LoadKeyE2 command 0Bh

Table 145. LoadKeyE2 command 0Bh

Command	Value	Action	Arguments and data	Returned data
LoadKeyE2	0Bh	reads a key from the EEPROM and puts it into the internal key buffer	start address LSB	-
			start address MSB	-

The LoadKeyE2 command interprets the first two bytes found in the FIFO buffer as the EEPROM starting byte address. The EEPROM bytes starting from the given starting byte address are interpreted as the key when stored in the correct key format as described in Section 9.2.3.1 “Key format” on page 16. When both argument bytes are available in the FIFO buffer, the command executes.

The LoadKeyE2 command can only be started by the microprocessor and it automatically stops after copying the key from the EEPROM to the key buffer.

11.6.1.1 Relevant LoadKeyE2 command error flags

If the key format is incorrect (see Section 9.2.3.1 “Key format” on page 16) an undefined value is copied into the key buffer and the KeyErr flag is set.

11.6.2 LoadKey command 19h

Table 146. LoadKey command 19h

Command	Value	Action	Arguments and data	Returned data
LoadKey	19h	reads a key from the FIFO buffer and puts it into the key buffer	byte 0 (LSB)	-
			byte 1	-
			…	-
			byte 10	-
			byte 11 (MSB)	-

All information provided in this document is subject to legal disclaimers.

© NXP Semiconductors N.V. 2015. All rights reserved.

The LoadKey command interprets the first twelve bytes it finds in the FIFO buffer as the key when stored in the correct key format as described in Section 9.2.3.1 “Key format” on page 16. When the twelve argument bytes are available in the FIFO buffer they are checked and, if valid, are copied into the key buffer.

The LoadKey command can only be started by the microprocessor and it automatically stops after copying the key from the FIFO buffer to the key buffer.

11.6.2.1 Relevant LoadKey command error flags

All bytes requested are copied from the FIFO buffer to the key buffer. If the key format is not correct (see Section 9.2.3.1 “Key format” on page 16) an undefined value is copied into the key buffer and the KeyErr flag is set.

11.6.3 Authent1 command 0Ch

Table 147. Authent1 command 0Ch

Command	Value	Action	Arguments and data	Returned data
Authent1	0Ch	performs the first part of the Crypto1 card authentication	card Authent1 command	-
			card block address	-
			card serial number LSB	-
			card serial number byte1	-
			card serial number byte2	-
			card serial number MSB	-

The Authent1 command is a special Transceive command; it sends six argument bytes to the card. The card’s response is not sent to the microprocessor, it is used instead to authenticate the card to the MFRC531 and vice versa.

The Authent1 command can be triggered only by the microprocessor. The sequence of states for this command are the same as those for the Transceive command; see Section 11.2.3 on page 82.

11.6.4 Authent2 command 14h

Table 148. Authent2 command 14h

Command	Value	Action	Arguments and data	Returned data
Authent2	14h	performs the second part of the card authentication using the Crypto1 algorithm	-	-

The Authent2 command is a special Transceive command. It does not need any argument byte, however all the data needed to be sent to the card is assembled by the MFRC531. The card response is not sent to the microprocessor but is used to authenticate the card to the MFRC531 and vice versa.

The Authent2 command can only be started by the microprocessor. The sequence of states for this command are the same as those for the Transceive command; see Section 11.2.3 on page 82.

All information provided in this document is subject to legal disclaimers.

© NXP Semiconductors N.V. 2015. All rights reserved.

11.6.4.1 Authent2 command effects

If the Authent2 command is successful, the authenticity of card and the MFRC531 are proved. This automatically sets the Crypto1On control bit. When bit Crypto1On = logic 1, all further card communication is encrypted using the Crypto1 security algorithm. If the Authent2 command fails, bit Crypto1On is cleared (Crypto1On = logic 0).

Remark: The Crypto1On flag can only be set by a successfully executed Authent2 command and not by the microprocessor. The microprocessor can clear bit Crypto1On to continue with unencrypted (plain) card communication.

Remark: The Authent2 command must be executed immediately after a successful Authent1 command; see Section 11.6.3 “Authent1 command 0Ch”. In addition, the keys stored in the key buffer and those on the card must match.

12. Limiting values

Table 149. Limiting values

In accordance with the Absolute Maximum Rating System (IEC 60134).

Symbol	Parameter	Conditions	Min	Max	Unit
T_{amb}	ambient temperature		–40	+150	°C
T_{stg}	storage temperature		–40	+150	°C
V_{DDD}	digital supply voltage		–0.5	+6	V
V_{DDA}	analog supply voltage		–0.5	+6	V
$V_{DD(TVDD)}$	TVDD supply voltage		–0.5	+6	V
$\|V_i\|$	input voltage (absolute value)	on any digital pin to DVSS	–0.5	V_{DDD} + 0.5	V
		on pin RX to AVSS	–0.5	V_{DDA} + 0.5	V

13. Characteristics

13.1 Operating condition range

Table 150. Operating condition range

Symbol	Parameter	Conditions	Min	Typ	Max	Unit
T_{amb}	ambient temperature	-	–25	+25	+85	°C
V_{DDD}	digital supply voltage	DVSS = AVSS = TVSS = 0 V	3.0	3.3	3.6	V
			4.5	5.0	5.5	V
V_{DDA}	analog supply voltage	DVSS = AVSS = TVSS = 0 V	4.5	5.0	5.5	V
$V_{DD(TVDD)}$	TVDD supply voltage	DVSS = AVSS = TVSS = 0 V	3.0	5.0	5.5	V
V_{ESD}	electrostatic discharge voltage	Human Body Model (HBM); 1.5 kΩ, 100 pF	-	-	1000	V
		Machine Model (MM); 0.75 μH, 200 pF	-	-	100	V

All information provided in this document is subject to legal disclaimers.

© NXP Semiconductors N.V. 2015. All rights reserved.

13.2 Current consumption

Table 151. Current consumption

Symbol	Parameter	Conditions	Min	Typ	Max	Unit
I_{DDD}	digital supply current	Idle command	-	8	11	mA
		Standby mode	-	3	5	mA
		Soft power-down mode	-	800	1000	µA
		Hard power-down mode	-	1	10	µA
I_{DDA}	analog supply current	Idle command; receiver on	-	25	40	mA
		Idle command; receiver off	-	12	15	mA
		Standby mode	-	10	13	mA
		Soft power-down mode	-	1	10	µA
		Hard power-down mode	-	1	10	µA
$I_{DD(TVDD)}$	TVDD supply current	continuous wave	-	-	150	mA
		pins TX1 and TX2 unconnected; TX1RFEn and TX2RFEn = logic 1	-	5.5	7	mA
		pins TX1 and TX2 unconnected; TX1RFEn and TX2RFEn = logic 0	-	65	130	µA

13.3 Pin characteristics

13.3.1 Input pin characteristics

Pins D0 to D7, A0, and A1 have TTL input characteristics and behave as defined in Table 152.

Table 152. Standard input pin characteristics

Symbol	Parameter	Conditions	Min	Typ	Max	Unit
I_{LI}	input leakage current		–1.0	-	+1.0	µA
V_{th}	threshold voltage	CMOS: V_{DDD} < 3.6 V	$0.35V_{DDD}$	-	$0.65V_{DDD}$	V
		TTL: 4.5 < V_{DDD}	0.8	-	2.0	V

The digital input pins NCS, NWR, NRD, ALE, A2, and MFIN have Schmitt trigger characteristics, and behave as defined in Table 153.

Table 153. Schmitt trigger input pin characteristics

Symbol	Parameter	Conditions	Min	Typ	Max	Unit
I_{LI}	input leakage current		–1.0	-	+1.0	µA
V_{th}	threshold voltage	positive-going threshold; TTL = 4.5 < V_{DDD}	1.4	-	2.0	V
		CMOS = V_{DDD} < 3.6 V	$0.65V_{DDD}$	-	$0.75V_{DDD}$	V
		negative-going threshold; TTL = 4.5 < V_{DDD}	0.8	-	1.3	V
		CMOS = V_{DDD} < 3.6 V	$0.25V_{DDD}$	-	$0.4V_{DDD}$	V

All information provided in this document is subject to legal disclaimers.

© NXP Semiconductors N.V. 2015. All rights reserved.

Pin RSTPD has Schmitt trigger CMOS characteristics. In addition, it is internally filtered by a RC low-pass filter which causes a propagation delay on the reset signal.

Table 154. RSTPD input pin characteristics

Symbol	Parameter	Conditions	Min	Typ	Max	Unit
I_{LI}	input leakage current		–1.0	-	+1.0	µA
V_{th}	threshold voltage	positive-going threshold; CMOS = V_{DDD} < 3.6 V	$0.65V_{DDD}$	-	$0.75V_{DDD}$	V
		negative-going threshold; CMOS = V_{DDD} < 3.6 V	$0.25V_{DDD}$	-	$0.4V_{DDD}$	V
t_{PD}	propagation delay		-	-	20	µs

The analog input pin RX has the input capacitance and input voltage range shown in Table 155.

Table 155. RX input capacitance and input voltage range

Symbol	Parameter	Conditions	Min	Typ	Max	Unit
C_i	input capacitance		-	-	15	pF
$V_{i(dyn)}$	dynamic input voltage	V_{DDA} = 5 V; T_{amb} = 25 °C	1.1	-	4.4	V

13.3.2 Digital output pin characteristics

Pins D0 to D7, MFOUT and IRQ have CMOS output characteristics and behave as defined in Table 156.

Table 156. Digital output pin characteristics

Symbol	Parameter	Conditions	Min	Typ	Max	Unit
V_{OH}	HIGH-level output voltage	V_{DDD} = 5 V; I_{OH} = –1 mA	2.4	4.9	-	V
		V_{DDD} = 5 V; I_{OH} = –10 mA	2.4	4.2	-	V
V_{OL}	LOW-level output voltage	V_{DDD} = 5 V; I_{OL} = 1 mA	-	25	400	mV
		V_{DDD} = 5 V; I_{OL} = 10 mA	-	250	400	mV
I_O	output current	source or sink; V_{DDD} = 5 V	-	-	10	mA

Remark: Pin IRQ can be configured as open collector which causes the V_{OH} values to be no longer applicable.

13.3.3 Antenna driver output pin characteristics

The source conductance of the antenna driver pins TX1 and TX2 for driving the HIGH-level can be configured using the CwConductance register's GsCfgCW[5:0] bits, while their source conductance for driving the LOW-level is constant.

The antenna driver default configuration output characteristics are specified in Table 157.

All information provided in this document is subject to legal disclaimers.

© NXP Semiconductors N.V. 2015. All rights reserved.

Table 157. Antenna driver output pin characteristics

Symbol	Parameter	Conditions	Min	Typ	Max	Unit
V_{OH}	HIGH-level output voltage	$V_{DD(TVDD)}$ = 5.0 V; I_{OL} = 20 mA	-	4.97	-	V
		$V_{DD(TVDD)}$ = 5.0 V; I_{OL} = 100 mA	-	4.85	-	V
V_{OL}	LOW-level output voltage	$V_{DD(TVDD)}$ = 5.0 V; I_{OL} = 20 mA	-	30	-	mV
		$V_{DD(TVDD)}$ = 5.0 V; I_{OL} = 100 mA	-	150	-	mV
I_O	output current	transmitter; continuous wave; peak-to-peak	-	-	200	mA

13.4 AC electrical characteristics

13.4.1 Separate read/write strobe bus timing

Table 158. Timing specification for separate read/write strobe

Symbol	Parameter	Conditions	Min	Typ	Max	Unit
t_{LHLL}	ALE HIGH time		20	-	-	ns
t_{AVLL}	address valid to ALE LOW time		15	-	-	ns
t_{LLAX}	address hold after ALE LOW time		8	-	-	ns
t_{LLRWL}	ALE LOW to read/write LOW time	ALE LOW to NRD or NWR LOW	15	-	-	ns
t_{SLRWL}	chip select LOW to read/write LOW time	NCS LOW to NRD or NWR LOW	0	-	-	ns
t_{RWHSH}	read/write HIGH to chip select HIGH time	NRD or NWR HIGH to NCS HIGH	0	-	-	ns
t_{RLDV}	read LOW to data input valid time	NRD LOW to data valid	-	-	65	ns
t_{RHDZ}	read HIGH to data input high impedance time	NRD HIGH to data high-impedance	-	-	20	ns
t_{WLQV}	write LOW to data output valid time	NWR LOW to data valid	-	-	35	ns
t_{WHDX}	data output hold after write HIGH time	data hold time after NWR HIGH	8	-	-	ns
t_{RWLRWH}	read/write LOW time	NRD or NWR	65	-	-	ns
t_{AVRWL}	address valid to read/write LOW time	NRD or NWR LOW (set-up time)	30	-	-	ns
t_{WHAX}	address hold after write HIGH time	NWR HIGH (hold time)	8	-	-	ns
t_{RWHRWL}	read/write HIGH time		150	-	-	ns

All information provided in this document is subject to legal disclaimers.

© NXP Semiconductors N.V. 2015. All rights reserved.

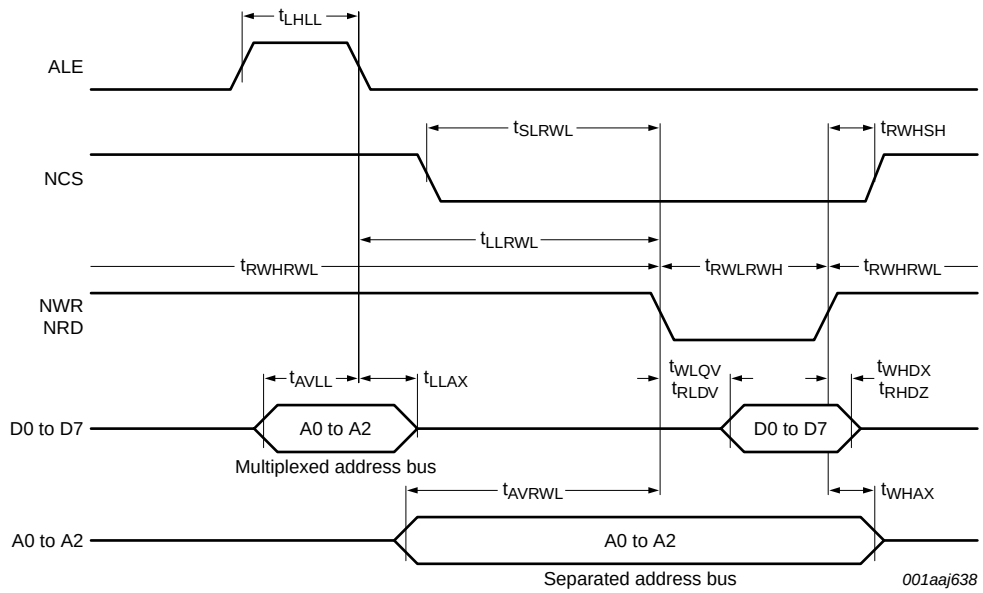

Fig 20. Separate read/write strobe timing diagram

Remark: The signal ALE is not relevant for separate address/data bus and the multiplexed addresses on the data bus do not care. The multiplexed address and data bus address lines (A0 to A2) must be connected as described in Section 9.1.3 on page 8.

13.4.2 Common read/write strobe bus timing

Table 159. Common read/write strobe timing specification

Symbol	Parameter	Conditions	Min	Typ	Max	Unit
t_{LHLL}	ALE HIGH time		20	-	-	ns
t_{AVLL}	address valid to ALE LOW time		15	-	-	ns
t_{LLAX}	address hold after ALE LOW time		8	-	-	ns
t_{LLDSL}	ALE LOW to data strobe LOW time	NWR or NRD LOW	15	-	-	ns
t_{SLDSL}	chip select LOW to data strobe LOW time	NCS LOW to NDS LOW	0	-	-	ns
t_{DSHSH}	data strobe HIGH to chip select HIGH time		0	-	-	ns
t_{DSLDV}	data strobe LOW to data input valid time		-	-	65	ns
t_{DSHDZ}	data strobe HIGH to data input high impedance time		-	-	20	ns
t_{DSLQV}	data strobe LOW to data output valid time	NDS/NCS LOW	-	-	35	ns
t_{DSHQX}	data output hold after data strobe HIGH time	NDS HIGH (write cycle hold time)	8	-	-	ns
t_{DSHRWX}	RW hold after data strobe HIGH time	after NDS HIGH	8	-	-	ns
t_{DSLDSH}	data strobe LOW time	NDS/NCS	65	-	-	ns

All information provided in this document is subject to legal disclaimers.

© NXP Semiconductors N.V. 2015. All rights reserved.

Table 159. Common read/write strobe timing specification *...continued*

Symbol	Parameter	Conditions	Min	Typ	Max	Unit
t_{AVDSL}	address valid to data strobe LOW time		30	-	-	ns
t_{RHAX}	address hold after read HIGH time		8	-	-	ns
t_{DSHDSL}	data strobe HIGH time	period between write sequences	150	-	-	ns
t_{WLDSL}	write LOW to data strobe LOW time	R/NW valid to NDS LOW	8	-	-	ns

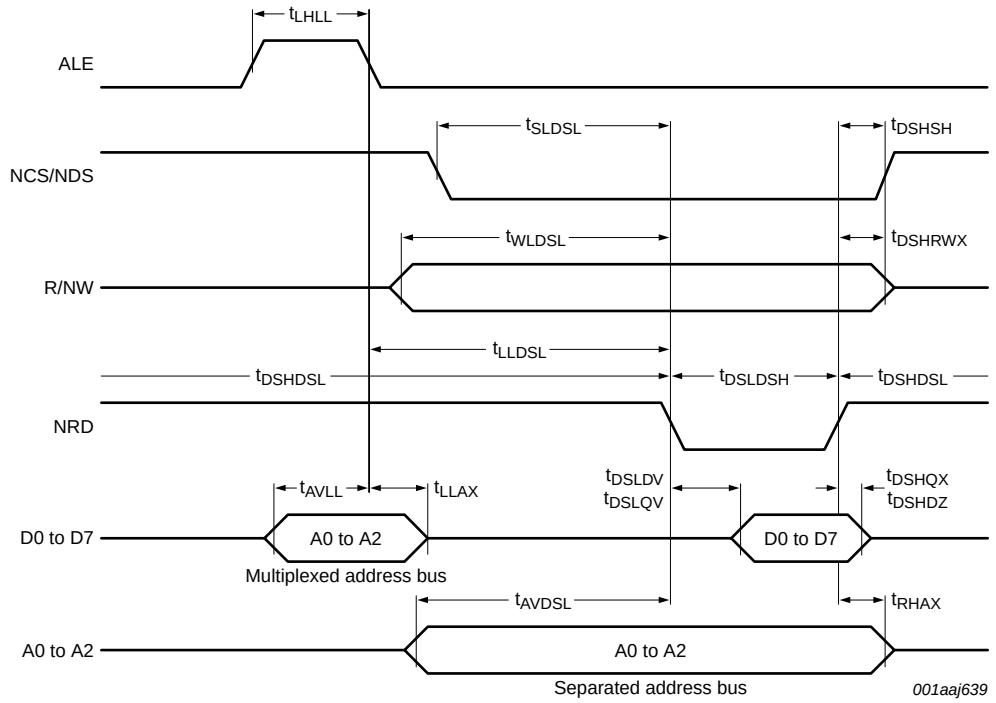

Fig 21. Common read/write strobe timing diagram

13.4.3 EPP bus timing

Table 160. Common read/write strobe timing specification for EPP

Symbol	Parameter	Conditions	Min	Typ	Max	Unit
t_{ASLASH}	address strobe LOW time	nAStrb	20	-	-	ns
t_{AVASH}	address valid to address strobe HIGH time	multiplexed address bus set-up time	15	-	-	ns
t_{ASHAV}	address valid after address strobe HIGH time	multiplexed address bus hold time	8	-	-	ns
t_{SLDSL}	chip select LOW to data strobe LOW time	NCS LOW to nDStrb LOW	0	-	-	ns
t_{DSHSH}	data strobe HIGH to chip select HIGH time	nDStrb HIGH to NCS HIGH	0	-	-	ns
t_{DSLDV}	data strobe LOW to data input valid time	read cycle	-	-	65	ns

All information provided in this document is subject to legal disclaimers.

© NXP Semiconductors N.V. 2015. All rights reserved.

Table 160. Common read/write strobe timing specification for EPP *...continued*

Symbol	Parameter	Conditions	Min	Typ	Max	Unit
t_{DSHDZ}	data strobe HIGH to data input high impedance time	read cycle	-	-	20	ns
t_{DSLQV}	data strobe LOW to data output valid time	nDStrb LOW	-	-	35	ns
t_{DSHQX}	data output hold after data strobe HIGH time	NCS HIGH	8	-	-	ns
t_{DSHWX}	write hold after data strobe HIGH time	nWrite	8	-	-	ns
t_{DSLDSH}	data strobe LOW time	nDStrb	65	-	-	ns
t_{WLDSL}	write LOW to data strobe LOW time	nWrite valid to nDStrb LOW	8	-	-	ns
$t_{DSL-WAITH}$	data strobe LOW to WAIT HIGH time	nDStrb LOW to nWrite HIGH	-	-	75	ns
$t_{DSH-WAITL}$	data strobe HIGH to WAIT LOW time	nDStrb HIGH to nWrite LOW	-	-	75	ns

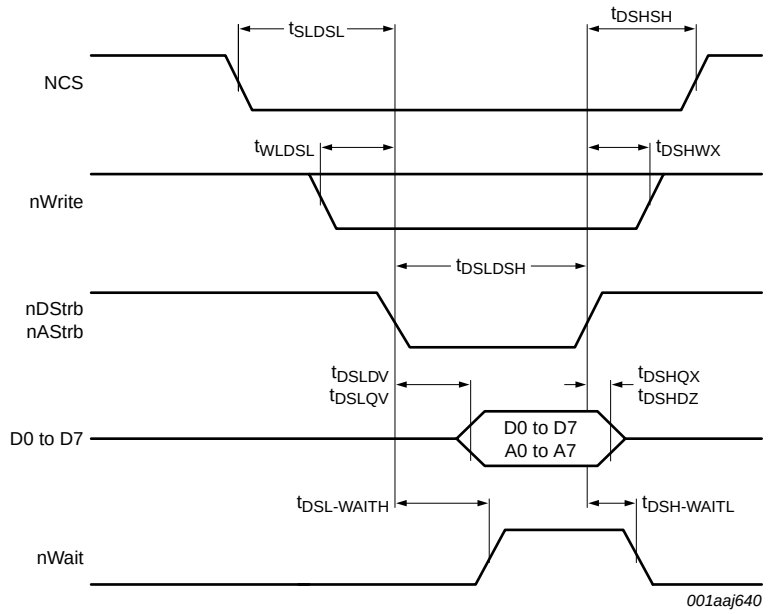

Fig 22. Timing diagram for common read/write strobe; EPP

Remark: Figure 22 does not distinguish between the address write cycle and a data write cycle. The timings for the address write and data write cycle are different. In EPP mode, the address lines (A0 to A2) must be connected as described in Section 9.1.3 on page 8.

All information provided in this document is subject to legal disclaimers.

© NXP Semiconductors N.V. 2015. All rights reserved.

13.4.4 SPI timing

Table 161. SPI timing specification

Symbol	Parameter	Conditions	Min	Typ	Max	Unit
t_{SCKL}	SCK LOW time		100	-	-	ns
t_{SCKH}	SCK HIGH time		100	-	-	ns
t_{DSHQX}	data output hold after data strobe HIGH time		20	-	-	ns
t_{DQXCH}	data input/output changing to clock HIGH time		20	-	-	ns
$t_{h(SCKL-Q)}$	SCK LOW to data output hold time		-	-	15	ns
$t_{(SCKL-NSSH)}$	SCK LOW to NSS HIGH time		20	-	-	ns

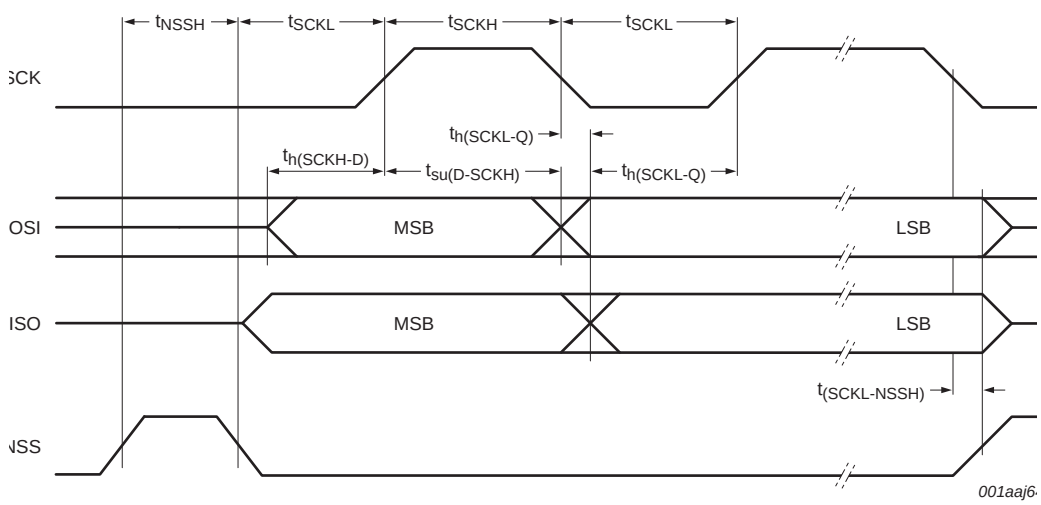

Fig 23. Timing diagram for SPI

Remark: To send more bytes in one data stream the NSS signal must be LOW during the send process. To send more than one data stream the NSS signal must be HIGH between each data stream.

13.4.5 Clock frequency

The clock input is pin OSCIN.

Table 162. Clock frequency

Symbol	Parameter	Conditions	Min	Typ	Max	Unit
f_{clk}	clock frequency	checked by the clock filter	-	13.56	-	MHz
δ_{clk}	clock duty cycle		40	50	60	%
t_{jit}	jitter time	of clock edges	-	-	10	ps

The clock applied to the MFRC531 acts as a time constant for the synchronous system's encoder and decoder. The stability of the clock frequency is an important factor for ensuring proper performance. To obtain highest performance, clock jitter must be as small as possible. This is best achieved using the internal oscillator buffer and the recommended circuitry; see Section 9.8 on page 29.

All information provided in this document is subject to legal disclaimers.

© NXP Semiconductors N.V. 2015. All rights reserved.

14. EEPROM characteristics

The EEPROM size is 32 × 16 × 8 = 4096 bit.

Table 163. EEPROM characteristics

Symbol	Parameter	Conditions	Min	Typ	Max	Unit
$N_{endu(W_ER)}$	write or erase endurance	erase/write cycles	100.000	-	-	Hz
t_{ret}	retention time	$T_{amb} \leq 55$ °C	10	-	-	year
t_{er}	erase time		-	-	2.9	ms
$t_{a(W)}$	write access time		-	-	2.9	ms

15. Application information

15.1 Typical application

15.1.1 Circuit diagram

Figure 24 shows a typical application where the antenna is directly matched to the MFRC531:

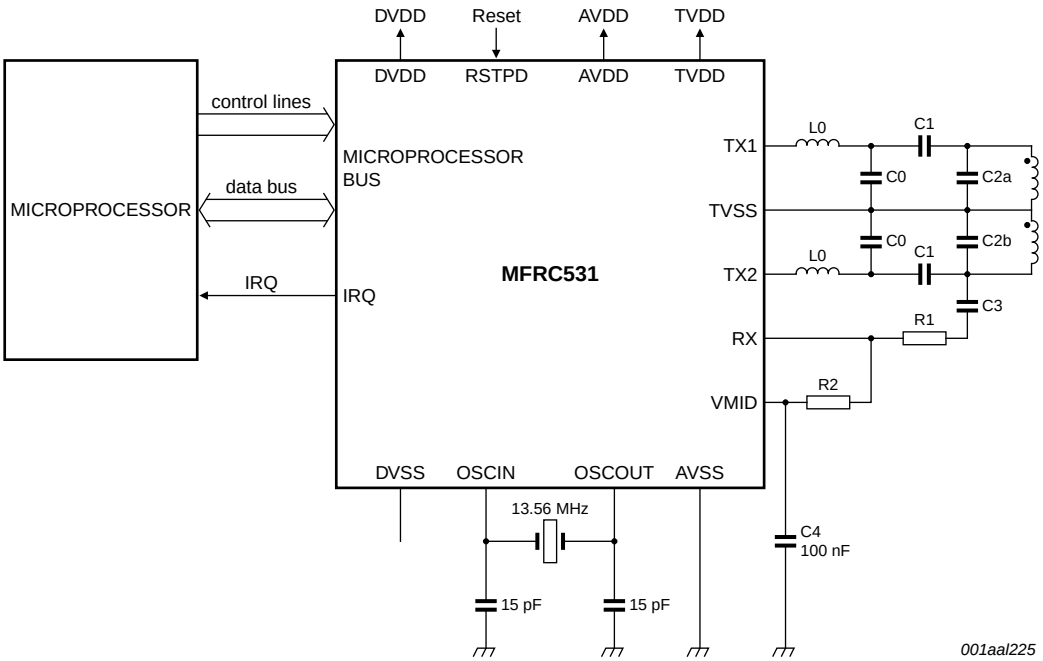

Fig 24. Application example circuit diagram: directly matched antenna

All information provided in this document is subject to legal disclaimers.

© NXP Semiconductors N.V. 2015. All rights reserved.

15.1.2 Circuit description

The matching circuit consists of an EMC low-pass filter (L0 and C0), matching circuitry (C1 and C2n), a receiver circuit (R1, R2, C3 and C4) and the antenna itself.

Refer to the following application notes for more detailed information about designing and tuning an antenna.

- *MICORE reader IC family; Directly Matched Antenna Design* Ref. 1
- *MIFARE (14443 A) 13.56 MHz RFID Proximity Antennas* Ref. 2.

15.1.2.1 EMC low-pass filter

The MIFARE system operates at a frequency of 13.56 MHz. This frequency is generated by a quartz oscillator to clock the MFRC531. It is also the basis for driving the antenna using the 13.56 MHz energy carrier. This not only causes power emissions at 13.56 MHz, it also emits power at higher harmonics. International EMC regulations define the amplitude of the emitted power over a broad frequency range. To meet these regulations, appropriate filtering of the output signal is required.

A multilayer board is recommended to implement a low-pass filter as shown in Figure 24. The low-pass filter consists of the components L0 and C0. The recommended values are given in Application notes *MICORE reader IC family; Directly Matched Antenna Design* Ref. 1 and *MIFARE (14443 A) 13.56 MHz RFID Proximity Antennas* Ref. 2.

Remark: To achieve best performance, all components must be at least equal in quality to those recommended.

Remark: The layout has a major influence on the overall performance of the filter.

15.1.2.2 Antenna matching

Due to the impedance transformation of the low-pass filter, the antenna coil has to be matched to a given impedance. The matching elements C1 and C2n can be estimated and have to be fine tuned depending on the design of the antenna coil.

The correct impedance matching is important to ensure optimum performance. The overall quality factor has to be considered to guarantee a proper ISO/IEC 14443 A and ISO/IEC 14443 B communication schemes. Environmental influences have to considered and common EMC design rules.

Refer to Application notes *MICORE reader IC family; Directly Matched Antenna Design* Ref. 1 and *MIFARE (14443 A) 13.56 MHz RFID Proximity Antennas* Ref. 2 for details.

Remark: Do not exceed the current limits ($I_{DD(TVDD)}$), otherwise the chip might be destroyed.

Remark: The overall 13.56 MHz RFID proximity antenna design in combination with the MFRC531 IC does not require any specialist RF knowledge. However, all relevant parameters have to be considered to guarantee optimum performance and international EMC compliance.

All information provided in this document is subject to legal disclaimers.

© NXP Semiconductors N.V. 2015. All rights reserved.

15.1.2.3 Receiver circuit

The internal receiver of the MFRC531 makes use of both subcarrier load modulation side-bands. No external filtering is required.

It is recommended to use the internally generated VMID potential as the input potential for pin RX. This VMID DC voltage level has to be coupled to pin RX using resistor (R2). To provide a stable DC reference voltage, capacitor (C4) must be connected between VMID and ground.

The AC voltage divider of R1 + C3 and R2 has to be designed taking in to account the AC voltage limits on pin RX. Depending on the antenna coil design and the impedance, matching the voltage at the antenna coil will differ. Therefore the recommended way to design the receiver circuit is to use the given values for R1, R2, and C3; refer to Application note; *MIFARE (14443 A) 13.56 MHz RFID Proximity Antennas* Ref. 2. The voltage on pin RX can be altered by varying R1 within the given limits.

Remark: R2 is AC connected to ground using C4.

15.1.2.4 Antenna coil

The precise calculation of the antenna coil's inductance is not practicable but the inductance can be estimated using Equation 10. We recommend designing an antenna that is either circular or rectangular.

$$L_1[nH] = 2 \cdot I_1[cm] \cdot \left(ln \langle \frac{I_1}{D_1} \rangle - K \right) N_1^{1.8} \tag{10}$$

- l_1 = length of one turn of the conductor loop
- D_1 = diameter of the wire or width of the PCB conductor, respectively
- K = antenna shape factor (K = 1.07 for circular antennas and K = 1.47 for square antennas)
- N_1 = number of turns
- ln = natural logarithm function

The values of the antenna inductance, resistance, and capacitance at 13.56 MHz depend on various parameters such as:

- antenna construction (type of PCB)
- thickness of conductor
- distance between the windings
- shielding layer
- metal or ferrite nearby in the environment

Therefore, a measurement of these parameters under real life conditions or at least a rough measurement and a tuning procedure is highly recommended to guarantee a reasonable performance. Refer to Application notes *MICORE reader IC family; Directly Matched Antenna Design* Ref. 1 and *MIFARE (14443 A) 13.56 MHz RFID Proximity Antennas* Ref. 2 for details.

All information provided in this document is subject to legal disclaimers.

© NXP Semiconductors N.V. 2015. All rights reserved.

15.2 Test signals

The MFRC531 allows different kinds of signal measurements. These measurements can be used to check the internally generated and received signals using the serial signal switch as described in Section 9.11 on page 35.

In addition, the MFRC531 enables users to select between:

- internal analog signals for measurement on pin AUX
- internal digital signals for observation on pin MFOUT (based on register selections)

These measurements can be helpful during the design-in phase to optimize the receiver's behavior or for test purposes.

15.2.1 Measurements using the serial signal switch

Using the serial signal switch on pin MFOUT, data is observed that is sent to the card or received from the card. Table 164 gives an overview of the different signals available.

Table 164. Signal routed to pin MFOUT

SignalToMFOUT	MFOUTSelect[2:0]	Signal routed to pin MFOUT
0	000	LOW
0	001	HIGH
0	010	envelope
0	011	transmit NRZ
0	100	Manchester with subcarrier
0	101	Manchester
0	110	reserved
0	111	reserved
1	X	digital test signal

Remark: The routing of the Manchester or the Manchester with subcarrier signal to pin MFOUT is only possible at 106 kBd based on ISO/IEC 14443 A.

15.2.1.1 TX control

Figure 25 shows as an example of an ISO/IEC 14443 A communication.

The signal is measured on pin MFOUT using the serial signal switch to control the data sent to the card. Setting the flag MFOUTSelect[2:0] = 010 sends the data to the card coded as NRZ. Setting MFOUTSelect[2:0] = 001 shows the data as a Miller coded signal.

The RFOut signal is measured directly on the antenna and gives the RF signal pulse shape. Refer to Application note *Directly matched Antenna - Excel calculation* (Ref. 3) for detail information on the RF signal pulse.

All information provided in this document is subject to legal disclaimers.

© NXP Semiconductors N.V. 2015. All rights reserved.

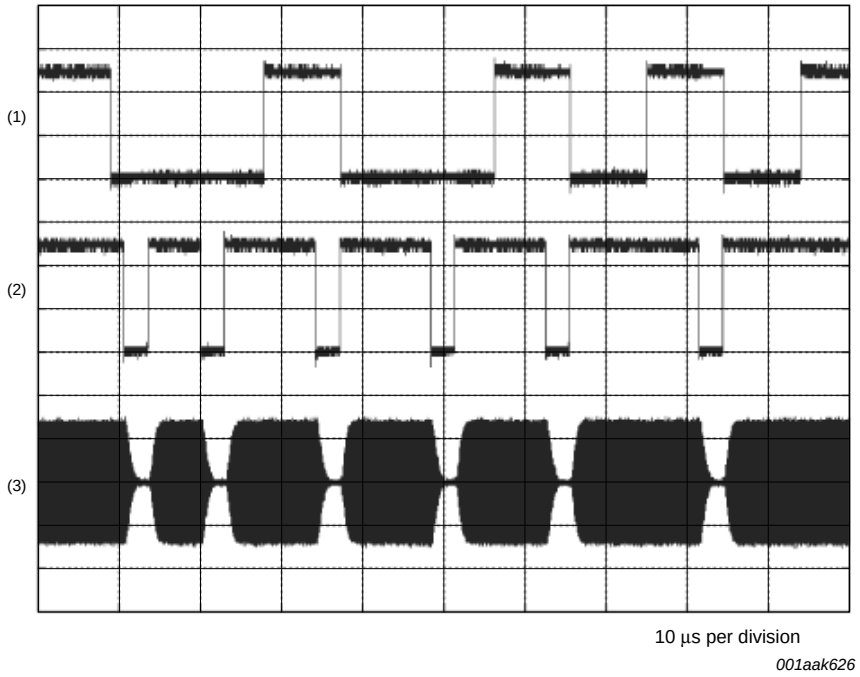

(1) MFOUTSelect[2:0] = 001; serial data stream; 2 V per division.

(2) MFOUTSelect[2:0] = 010; serial data stream; 2 V per division.

(3) RFOut; 1 V per division.

Fig 25. TX control signals

15.2.1.2 RX control

Figure 26 shows an example of ISO/IEC 14443 A communication which represents the beginning of a card's answer to a request signal.

The RF signal shows the RF voltage measured directly on the antenna so that the card's load modulation is visible. Setting MFOUTSelect[2:0] = 011 shows the Manchester decoded signal with subcarrier. Setting MFOUTSelect[2:0] = 100 shows the Manchester decoded signal.

All information provided in this document is subject to legal disclaimers.

© NXP Semiconductors N.V. 2015. All rights reserved.

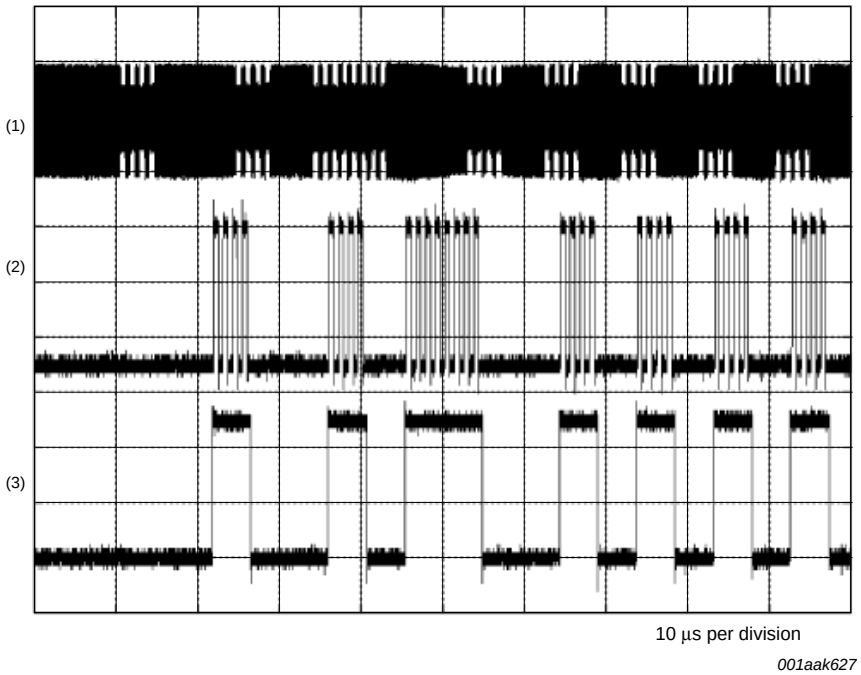

(1) RFOut; 1 V per division.

(2) MFOUTSelect[2:0] = 011; Manchester with subcarrier; 2 V per division.

(3) MFOUTSelect[2:0] = 100; Manchester; 2 V per division.

Fig 26. RX control signals

15.2.2 Analog test signals

The analog test signals can be routed to pin AUX by selecting them using the TestAnaSelect register TestAnaOutSel[4:0] bits.

Table 165. Analog test signal selection

Value	Signal Name	Description
0	VMID	voltage at internal node VMID
1	Vbandgap	internal reference voltage generated by the bandgap
2	VRxFollI	output signal from the demodulator using the I-clock
3	VRxFollQ	output signal from the demodulator using the Q-clock
4	VRxAmpI	I-channel subcarrier signal amplified and filtered
5	VRxAmpQ	Q-channel subcarrier signal amplified and filtered
6	VCorrNI	output signal of N-channel correlator fed by the I-channel subcarrier signal
7	VCorrNQ	output signal of N-channel correlator fed by the Q-channel subcarrier signal
8	VCorrDI	output signal of D-channel correlator fed by the I-channel subcarrier signal
9	VCorrDQ	output signal of D-channel correlator fed by the Q-channel subcarrier signal
A	VEvalL	evaluation signal from the left half-bit

All information provided in this document is subject to legal disclaimers.

© NXP Semiconductors N.V. 2015. All rights reserved.

Table 165. Analog test signal selection *...continued*

Value	Signal Name	Description
B	VEvalR	evaluation signal from the right half-bit
C	VTemp	temperature voltage derived from band gap
D	reserved	reserved for future use
E	reserved	reserved for future use
F	reserved	reserved for future use

15.2.3 Digital test signals

Digital test signals can be routed to pin MFOUT by setting bit SignalToMFOUT = logic 1. A digital test signal is selected using the TestDigiSelect register TestDigiSignalSel[6:0] bits. The signals selected by the TestDigiSignalSel[6:0] bits are shown in Table 166.

Table 166. Digital test signal selection

TestDigiSignalSel [6:0]	Signal name	Description
F4h	s_data	data received from the card
E4h	s_valid	when logic 1 is returned the s_data and s_coll signals are valid
D4h	s_coll	when logic 1 is returned a collision has been detected in the current bit
C4h	s_clock	internal serial clock: during transmission, this is the encoder clock during reception this is the receiver clock
B5h	rd_sync	internal synchronized read signal which is derived from the parallel microprocessor interface
A5h	wr_sync	internal synchronized write signal which is derived from the parallel microprocessor interface
96h	int_clock	internal 13.56 MHz clock
83h	BPSK_out	BPSK output signal
E2h	BPSK_sig	BPSK signal's amplitude detected
00h	no test signal	output as defined by the MFOUTSelect register MFOUTSelect[2:0] bits routed to pin MFOUT

If test signals are not used, the TestDigiSelect register address value must be 00h.

Remark: All other values for TestDigiSignalSel[6:0] are for production test purposes only.

15.2.4 Examples of ISO/IEC 14443 A analog and digital test signals

Figure 27 shows a MIFARE card's answer to a request command using the Q-clock receiving path. RX reference is given to show the Manchester modulated signal on pin RX.

The signal is demodulated and amplified in the receiver circuitry. Signal VRXAmpQ is the amplified side-band signal using the Q-clock for demodulation. The signals VCorrDQ and VCorrNQ were generated in the correlation circuitry. They are processed further in the evaluation and digitizer circuitry.

All information provided in this document is subject to legal disclaimers.

© NXP Semiconductors N.V. 2015. All rights reserved.

Signals VEvalR and VEvalL show the evaluation of the signal's right and left half-bit. Finally, the digital test signal s_data shows the received data. This is then sent to the internal digital circuit and s_valid which indicates the received data stream is valid.

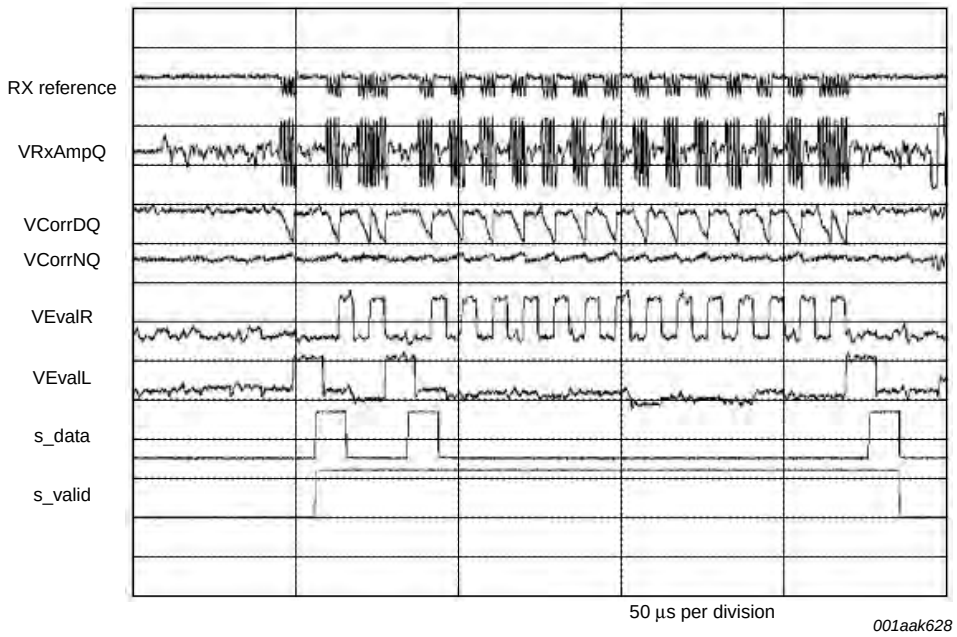

Fig 27. ISO/IEC 14443 A receiving path Q-clock

All information provided in this document is subject to legal disclaimers.

© NXP Semiconductors N.V. 2015. All rights reserved.

16. Package outline

SO32: plastic small outline package; 32 leads; body width 7.5 mm **SOT287-1**

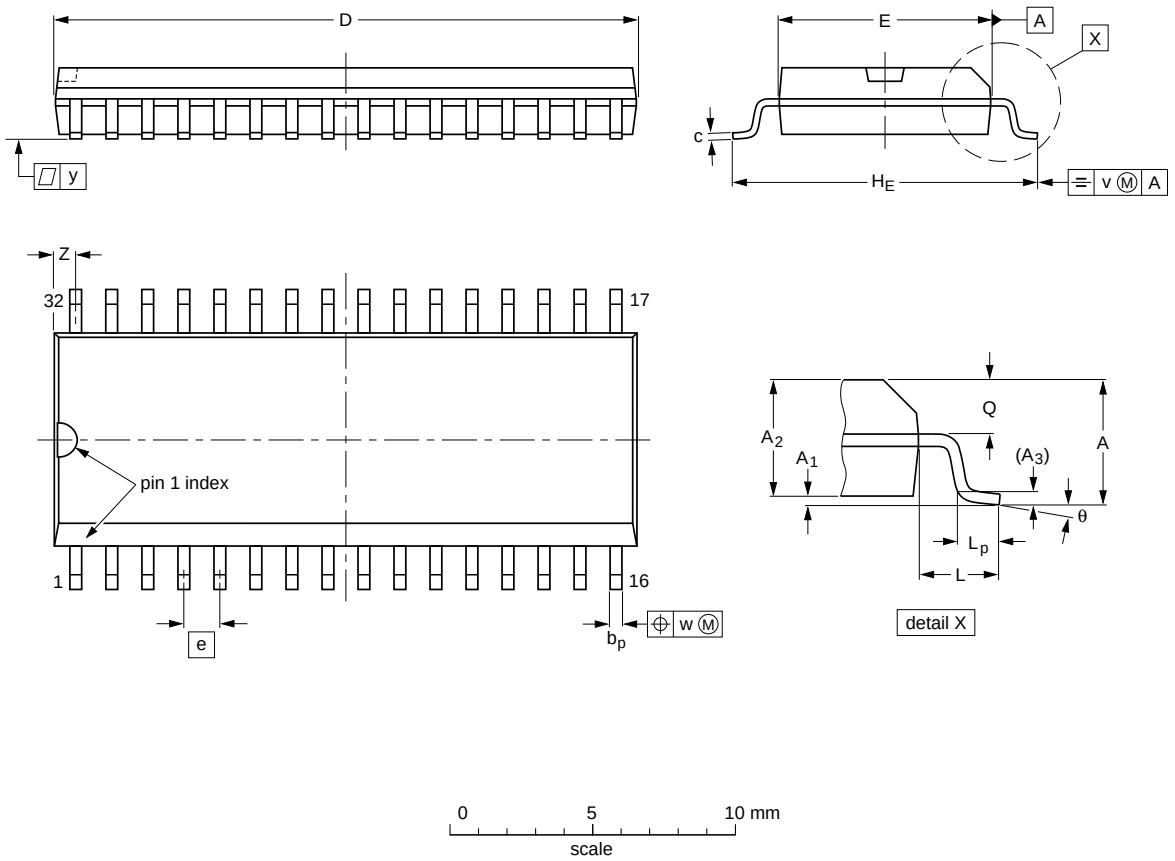

DIMENSIONS (inch dimensions are derived from the original mm dimensions)

UNIT	A max.	A_1	A_2	A_3	b_p	c	D (1)	E (1)	e	H_E	L	L_p	Q	v	w	y	Z (1)	θ
mm	2.65	0.3 0.1	2.45 2.25	0.25	0.49 0.36	0.27 0.18	20.7 20.3	7.6 7.4	1.27	10.65 10.00	1.4	1.1 0.4	1.2 1.0	0.25	0.25	0.1	0.95 0.55	8° 0°
inches	0.1	0.012 0.004	0.096 0.089	0.01	0.02 0.01	0.011 0.007	0.81 0.80	0.30 0.29	0.05	0.419 0.394	0.055	0.043 0.016	0.047 0.039	0.01	0.01	0.004	0.037 0.022	

Note

1. Plastic or metal protrusions of 0.15 mm (0.006 inch) maximum per side are not included.

OUTLINE VERSION	REFERENCES				EUROPEAN PROJECTION	ISSUE DATE
	IEC	JEDEC	JEITA			
SOT287-1		MO-119				~~00-08-17~~ 03-02-19

Fig 28. Package outline SOT287-1

All information provided in this document is subject to legal disclaimers.

© NXP Semiconductors N.V. 2015. All rights reserved.

17. Abbreviations

Table 167. Abbreviations and acronyms

Acronym	Description
ASK	Amplitude-Shift Keying
BPSK	Binary Phase-Shift Keying
CMOS	Complementary Metal-Oxide Semiconductor
CRC	Cyclic Redundancy Check
EOF	End Of Frame
EPP	Enhanced Parallel Port
ETU	Elementary Time Unit
FIFO	First In, First Out
HBM	Human Body Model
LSB	Least Significant Bit
MM	Machine Model
MSB	Most Significant Bit
NRZ	None Return to Zero
POR	Power-On Reset
PCD	Proximity Coupling Device
PICC	Proximity Integrated Circuit Card
SOF	Start Of Frame
SPI	Serial Peripheral Interface

18. References

[1] **Application note —** MICORE reader IC family; Directly Matched Antenna Design.

[2] **Application note —** MIFARE (14443 A) 13.56 MHz RFID Proximity Antennas.

[3] **Application note —** Directly matched Antenna - Excel calculation.

[4] **ISO standard —** ISO/IEC 14443 Identification cards - Contactless integrated circuit(s) cards - Proximity cards, part 1-4.

[5] **Application note —** MIFARE Implementation of Higher Baud rates.

All information provided in this document is subject to legal disclaimers.

© NXP Semiconductors N.V. 2015. All rights reserved.

19. Revision history

Table 168. Revision history

Document ID	Release date	Data sheet status	Change notice	Supersedes
MFRC531 v. 3.7	20150630	Product data sheet	-	MFRC531 v. 3.6
Modifications:	• Table 13 “Product type identification definition”: corrected			
MFRC531 v. 3.6	20140227	Product data sheet	-	MFRC531 v. 3.5
Modifications:	Section 2 “General description”: 1st paragraph updated			
MFRC531 v. 3.5	20140203	Product data sheet	-	MFRC531_34
Modifications:	• Section 2 “General description”: updated • Change of descriptive title			
MFRC531_34	20100126	Product data sheet	-	056633
Modifications:	• The format of this data sheet has been redesigned to comply with the new identity guidelines of NXP Semiconductors • Legal texts have been adapted to the new company name where appropriate • The symbols for electrical characteristics and their parameters have been updated to meet the NXP Semiconductors’ guidelines • A number of inconsistencies in pin, register and bit names have been eliminated from the data sheet • All drawings have been updated • Several symbol changes made to drawings in Figure 23 on page 97 to Figure 26 “RX control signals” on page 103 • Section 5 “Quick reference data” on page 3: section added • Section 6 “Ordering information” on page 3: updated • Section 15.1.2.4 “Antenna coil” on page 100: added missing formula and updated the last clause • Section 16 “Package outline” on page 106: updated • Data sheet security status changed from COMPANY CONFIDENTIAL to COMPANY PUBLIC • RATP/Innovatron Technologies license statement added to the legal page			
056633	December 2005	Product data sheet		056632
056632	April 2005	Product data sheet		056631
056631	May 2004	Product data sheet		056630
056630	November 2002	Product data sheet		056620
056620	January 2002	Preliminary data sheet		056610
056610	July 2001	Objective data sheet		-

All information provided in this document is subject to legal disclaimers.

© NXP Semiconductors N.V. 2015. All rights reserved.

20. Legal information

20.1 Data sheet status

Document status[1][2]	Product status[3]	Definition
Objective [short] data sheet	Development	This document contains data from the objective specification for product development.
Preliminary [short] data sheet	Qualification	This document contains data from the preliminary specification.
Product [short] data sheet	Production	This document contains the product specification.

[1] Please consult the most recently issued document before initiating or completing a design.

[2] The term 'short data sheet' is explained in section "Definitions".

[3] The product status of device(s) described in this document may have changed since this document was published and may differ in case of multiple devices. The latest product status information is available on the Internet at URL http://www.nxp.com.

20.2 Definitions

Draft — The document is a draft version only. The content is still under internal review and subject to formal approval, which may result in modifications or additions. NXP Semiconductors does not give any representations or warranties as to the accuracy or completeness of information included herein and shall have no liability for the consequences of use of such information.

Short data sheet — A short data sheet is an extract from a full data sheet with the same product type number(s) and title. A short data sheet is intended for quick reference only and should not be relied upon to contain detailed and full information. For detailed and full information see the relevant full data sheet, which is available on request via the local NXP Semiconductors sales office. In case of any inconsistency or conflict with the short data sheet, the full data sheet shall prevail.

Product specification — The information and data provided in a Product data sheet shall define the specification of the product as agreed between NXP Semiconductors and its customer, unless NXP Semiconductors and customer have explicitly agreed otherwise in writing. In no event however, shall an agreement be valid in which the NXP Semiconductors product is deemed to offer functions and qualities beyond those described in the Product data sheet.

20.3 Disclaimers

Limited warranty and liability — Information in this document is believed to be accurate and reliable. However, NXP Semiconductors does not give any representations or warranties, expressed or implied, as to the accuracy or completeness of such information and shall have no liability for the consequences of use of such information. NXP Semiconductors takes no responsibility for the content in this document if provided by an information source outside of NXP Semiconductors.

In no event shall NXP Semiconductors be liable for any indirect, incidental, punitive, special or consequential damages (including - without limitation - lost profits, lost savings, business interruption, costs related to the removal or replacement of any products or rework charges) whether or not such damages are based on tort (including negligence), warranty, breach of contract or any other legal theory.

Notwithstanding any damages that customer might incur for any reason whatsoever, NXP Semiconductors' aggregate and cumulative liability towards customer for the products described herein shall be limited in accordance with the *Terms and conditions of commercial sale* of NXP Semiconductors.

Right to make changes — NXP Semiconductors reserves the right to make changes to information published in this document, including without limitation specifications and product descriptions, at any time and without notice. This document supersedes and replaces all information supplied prior to the publication hereof.

Suitability for use — NXP Semiconductors products are not designed, authorized or warranted to be suitable for use in life support, life-critical or safety-critical systems or equipment, nor in applications where failure or malfunction of an NXP Semiconductors product can reasonably be expected to result in personal injury, death or severe property or environmental damage. NXP Semiconductors and its suppliers accept no liability for inclusion and/or use of NXP Semiconductors products in such equipment or applications and therefore such inclusion and/or use is at the customer's own risk.

Applications — Applications that are described herein for any of these products are for illustrative purposes only. NXP Semiconductors makes no representation or warranty that such applications will be suitable for the specified use without further testing or modification.

Customers are responsible for the design and operation of their applications and products using NXP Semiconductors products, and NXP Semiconductors accepts no liability for any assistance with applications or customer product design. It is customer's sole responsibility to determine whether the NXP Semiconductors product is suitable and fit for the customer's applications and products planned, as well as for the planned application and use of customer's third party customer(s). Customers should provide appropriate design and operating safeguards to minimize the risks associated with their applications and products.

NXP Semiconductors does not accept any liability related to any default, damage, costs or problem which is based on any weakness or default in the customer's applications or products, or the application or use by customer's third party customer(s). Customer is responsible for doing all necessary testing for the customer's applications and products using NXP Semiconductors products in order to avoid a default of the applications and the products or of the application or use by customer's third party customer(s). NXP does not accept any liability in this respect.

Limiting values — Stress above one or more limiting values (as defined in the Absolute Maximum Ratings System of IEC 60134) will cause permanent damage to the device. Limiting values are stress ratings only and (proper) operation of the device at these or any other conditions above those given in the Recommended operating conditions section (if present) or the Characteristics sections of this document is not warranted. Constant or repeated exposure to limiting values will permanently and irreversibly affect the quality and reliability of the device.

Terms and conditions of commercial sale — NXP Semiconductors products are sold subject to the general terms and conditions of commercial sale, as published at http://www.nxp.com/profile/terms, unless otherwise agreed in a valid written individual agreement. In case an individual agreement is concluded only the terms and conditions of the respective agreement shall apply. NXP Semiconductors hereby expressly objects to applying the customer's general terms and conditions with regard to the purchase of NXP Semiconductors products by customer.

No offer to sell or license — Nothing in this document may be interpreted or construed as an offer to sell products that is open for acceptance or the grant, conveyance or implication of any license under any copyrights, patents or other industrial or intellectual property rights.

All information provided in this document is subject to legal disclaimers.

© NXP Semiconductors N.V. 2015. All rights reserved.

Export control — This document as well as the item(s) described herein may be subject to export control regulations. Export might require a prior authorization from competent authorities.

Quick reference data — The Quick reference data is an extract of the product data given in the Limiting values and Characteristics sections of this document, and as such is not complete, exhaustive or legally binding.

Non-automotive qualified products — Unless this data sheet expressly states that this specific NXP Semiconductors product is automotive qualified, the product is not suitable for automotive use. It is neither qualified nor tested in accordance with automotive testing or application requirements. NXP Semiconductors accepts no liability for inclusion and/or use of non-automotive qualified products in automotive equipment or applications.

In the event that customer uses the product for design-in and use in automotive applications to automotive specifications and standards, customer (a) shall use the product without NXP Semiconductors' warranty of the product for such automotive applications, use and specifications, and (b) whenever customer uses the product for automotive applications beyond NXP Semiconductors' specifications such use shall be solely at customer's own risk, and (c) customer fully indemnifies NXP Semiconductors for any liability, damages or failed product claims resulting from customer design and use of the product for automotive applications beyond NXP Semiconductors' standard warranty and NXP Semiconductors' product specifications.

Translations — A non-English (translated) version of a document is for reference only. The English version shall prevail in case of any discrepancy between the translated and English versions.

20.4 Licenses

Purchase of NXP ICs with ISO/IEC 14443 type B functionality	
RATP/Innovatron Technology	This NXP Semiconductors IC is ISO/IEC 14443 Type B software enabled and is licensed under Innovatron's Contactless Card patents license for ISO/IEC 14443 B. The license includes the right to use the IC in systems and/or end-user equipment.

20.5 Trademarks

Notice: All referenced brands, product names, service names and trademarks are the property of their respective owners.

MIFARE — is a trademark of NXP Semiconductors N.V.

MIFARE Ultralight — is a trademark of NXP Semiconductors N.V.

MIFARE Plus — is a trademark of NXP Semiconductors N.V.

DESFire — is a trademark of NXP Semiconductors N.V.

21. Contact information

For more information, please visit: **http://www.nxp.com**

For sales office addresses, please send an email to: **salesaddresses@nxp.com**

All information provided in this document is subject to legal disclaimers.

© NXP Semiconductors N.V. 2015. All rights reserved.

22. Tables

Table 1. Quick reference data 3
Table 2. Ordering information 3
Table 3. Pin description 5
Table 4. Supported microprocessor and EPP interface signals 7
Table 5. Connection scheme for detecting the parallel interface type 8
Table 6. SPI compatibility 10
Table 7. SPI read data 10
Table 8. SPI read address 11
Table 9. SPI write data 11
Table 10. SPI write address 11
Table 11. EEPROM memory organization diagram 12
Table 12. Product information field 13
Table 13. Product type identification definition 13
Table 14. Byte assignment for register initialization at start-up 14
Table 15. Shipment content of StartUp configuration file . 15
Table 16. Byte assignment for register initialization at startup. 16
Table 17. FIFO buffer access 17
Table 18. Associated FIFO buffer registers and flags . . . 19
Table 19. Interrupt sources 20
Table 20. Interrupt control registers 20
Table 21. Associated Interrupt request system registers and flags 21
Table 22. Associated timer unit registers and flags 25
Table 23. Signal on pins during Hard power-down 26
Table 24. Pin TX1 configurations 29
Table 25. Pin TX2 configurations 30
Table 26. TX1 and TX2 source resistance of n-channel driver transistor against GsCfgCW or GsCfgMod 31
Table 27. Gain factors for the internal amplifier 34
Table 28. DecoderSource[1:0] values 37
Table 29. ModulatorSource[1:0] values 37
Table 30. MFOUTSelect[2:0] values 37
Table 31. Register settings to enable use of the analog circuitry 38
Table 32. MIFARE higher baud rates 38
Table 33. ISO/IEC 14443 B registers and flags 39
Table 34. Dedicated address bus: assembling the register address 41
Table 35. Multiplexed address bus: assembling the register address 42
Table 36. Behavior and designation of register bits 42
Table 37. MFRC531 register overview 43
Table 38. MFRC531 register flags overview 45
Table 39. Page register (address: 00h, 08h, 10h, 18h, 20h, 28h, 30h, 38h) reset value: 1000 0000b, 80h bit allocation 48
Table 40. Page register bit descriptions 48
Table 41. Command register (address: 01h) reset value: x000 0000b, x0h bit allocation 48
Table 42. Command register bit descriptions 48
Table 43. FIFOData register (address: 02h) reset value: xxxx xxxxb, 05h bit allocation 49
Table 44. FIFOData register bit descriptions 49
Table 45. PrimaryStatus register (address: 03h) reset value: 0000 0101b, 05h bit allocation 49
Table 46. PrimaryStatus register bit descriptions 49
Table 47. FIFOLength register (address: 04h) reset value: 0000 0000b, 00h bit allocation 50
Table 48. FIFOLength bit descriptions 50
Table 49. SecondaryStatus register (address: 05h) reset value: 01100 000b, 60h bit allocation 51
Table 50. SecondaryStatus register bit descriptions 51
Table 51. InterruptEn register (address: 06h) reset value: 0000 0000b, 00h bit allocation 51
Table 52. InterruptEn register bit descriptions 51
Table 53. InterruptRq register (address: 07h) reset value: 0000 0000b, 00h bit allocation 52
Table 54. InterruptRq register bit descriptions 52
Table 55. Control register (address: 09h) reset value: 0000 0000b, 00h bit allocation 53
Table 56. Control register bit descriptions 53
Table 57. ErrorFlag register (address: 0Ah) reset value: 0100 0000b, 40h bit allocation 53
Table 58. ErrorFlag register bit descriptions 53
Table 59. CollPos register (address: 0Bh) reset value: 0000 0000b, 00h bit allocation 54
Table 60. CollPos register bit descriptions 54
Table 61. TimerValue register (address: 0Ch) reset value: xxxx xxxxb, xxh bit allocation 55
Table 62. TimerValue register bit descriptions 55
Table 63. CRCResultLSB register (address: 0Dh) reset value: xxxx xxxxb, xxh bit allocation 55
Table 64. CRCResultLSB register bit descriptions 55
Table 65. CRCResultMSB register (address: 0Eh) reset value: xxxx xxxxb, xxh bit allocation 55
Table 66. CRCResultMSB register bit descriptions 55
Table 67. BitFraming register (address: 0Fh) reset value: 0000 0000b, 00h bit allocation 56
Table 68. BitFraming register bit descriptions 56
Table 69. TxControl register (address: 11h) reset value: 0101 1000b, 58h bit allocation 57

continued >>

All information provided in this document is subject to legal disclaimers.

© NXP Semiconductors N.V. 2015. All rights reserved.

Table 70. TxControl register bit descriptions 57
Table 71. CwConductance register (address: 12h) reset value: 0011 1111b, 3Fh bit allocation 58
Table 72. CwConductance register bit descriptions 58
Table 73. ModConductance register (address: 13h) reset value: 0011 1111b, 3Fh bit allocation 58
Table 74. ModConductance register bit descriptions 58
Table 75. CoderControl register (address: 14h) reset value: 0001 1001b, 19h bit allocation 59
Table 76. CoderControl register bit descriptions 59
Table 77. ModWidth register (address: 15h) reset value: 0001 0011b, 13h bit allocation 59
Table 78. ModWidth register bit descriptions 59
Table 79. PreSet16 register (address: 16h) reset value: 0000 0000b, 00h bit allocation 59
Table 80. TypeBFraming register (address: 17h) reset value: 0011 1011b, 3Bh bit allocation 60
Table 81. TypeBFraming register bit descriptions 60
Table 82. RxControl1 register (address: 19h) reset value: 0111 0011b, 73h bit allocation 61
Table 83. RxControl1 register bit descriptions 61
Table 84. DecoderControl register (address: 1Ah) reset value: 0000 1000b, 08h bit allocation 62
Table 85. DecoderControl register bit descriptions 62
Table 86. BitPhase register (address: 1Bh) reset value: 1010 1101b, ADh bit allocation 62
Table 87. BitPhase register bit descriptions 62
Table 88. RxThreshold register (address: 1Ch) reset value: 1111 1111b, FFh bit allocation 63
Table 89. RxThreshold register bit descriptions 63
Table 90. BPSKDemControl register (address: 1Dh) reset value: 0001 1110b, 1Eh bit allocation 63
Table 91. BPSKDemControl register bit descriptions . . .63
Table 92. RxControl2 register (address: 1Eh) reset value: 0100 0001b, 41h bit allocation 64
Table 93. RxControl2 register bit descriptions 64
Table 94. ClockQControl register (address: 1Fh) reset value: 000x xxxxb, xxh bit allocation 64
Table 95. ClockQControl register bit descriptions 64
Table 96. RxWait register (address: 21h) reset value: 0000 0101b, 06h bit allocation 65
Table 97. RxWait register bit descriptions 65
Table 98. ChannelRedundancy register (address: 22h) reset value: 0000 0011b, 03h bit allocation . . .65
Table 99. ChannelRedundancy bit descriptions 65
Table 100. CRCPresetLSB register (address: 23h) reset value: 0101 0011b, 63h bit allocation 66
Table 101. CRCPresetLSB register bit descriptions 66
Table 102. CRCPresetMSB register (address: 24h) reset value: 0101 0011b, 63h bit allocation 66
Table 103. CRCPresetMSB bit descriptions 66
Table 104. PreSet25 register (address: 25h) reset value: 0000 0000b, 00h bit allocation 66
Table 105. MFOUTSelect register (address: 26h) reset value: 0000 0000b, 00h bit allocation 67
Table 106. MFOUTSelect register bit descriptions 67
Table 107. PreSet27 (address: 27h) reset value: xxxx xxxxb, xxh bit allocation 67
Table 108. FIFOLevel register (address: 29h) reset value: 0000 1000b, 08h bit allocation 68
Table 109. FIFOLevel register bit descriptions 68
Table 110. TimerClock register (address: 2Ah) reset value: 0000 0111b, 07h bit allocation 68
Table 111. TimerClock register bit descriptions 68
Table 112. TimerControl register (address: 2Bh) reset value: 0000 0110b, 06h bit allocation 69
Table 113. TimerControl register bit descriptions 69
Table 114. TimerReload register (address: 2Ch) reset value: 0000 1010b, 0Ah bit allocation 69
Table 115. TimerReload register bit descriptions 69
Table 116. IRQPinConfig register (address: 2Dh) reset value: 0000 0010b, 02h bit allocation 70
Table 117. IRQPinConfig register bit descriptions 70
Table 118. PreSet2E register (address: 2Eh) reset value: xxxx xxxxb, xxh bit allocation 70
Table 119. PreSet2F register (address: 2Fh) reset value: xxxx xxxxb, xxh bit allocation 70
Table 120. Reserved registers (address: 31h, 32h, 33h, 34h, 35h, 36h, 37h) reset value: xxxx xxxxb, xxh bit allocation 70
Table 121. Reserved register (address: 39h) reset value: xxxx xxxxb, xxh bit allocation 71
Table 122. TestAnaSelect register (address: 3Ah) reset value: 0000 0000b, 00h bit allocation 71
Table 123. TestAnaSelect bit descriptions 71
Table 124. Reserved register (address: 3Bh) reset value: xxxx xxxxb, xxh bit allocation 72
Table 125. Reserved register (address: 3Ch) reset value: xxxx xxxxb, xxh bit allocation 72
Table 126. TestDigiSelect register (address: 3Dh) reset value: xxxx xxxxb, xxh bit allocation 72
Table 127. TestDigiSelect register bit descriptions 72
Table 128. Reserved register (address: 3Eh, 3Fh) reset value: xxxx xxxxb, xxh bit allocation 73
Table 129. MFRC531 commands overview 73
Table 130. StartUp command 3Fh 75
Table 131. Idle command 00h 75
Table 132. Transmit command 1Ah 76
Table 133. Transmission of frames of more than 64 bytes 79
Table 134. Receive command 16h 79
Table 135. Return values for bit-collision positions 81

continued >>

All information provided in this document is subject to legal disclaimers.

© NXP Semiconductors N.V. 2015. All rights reserved.

Table 136. Communication error table 81
Table 137. Transceive command 1Eh 82
Table 138. Meaning of ModemState 82
Table 139. WriteE2 command 01h 84
Table 140. ReadE2 command 03h 86
Table 141. LoadConfig command 07h 86
Table 142. CalcCRC command 12h 87
Table 143. CRC coprocessor parameters 87
Table 144. ErrorFlag register error flags overview 88
Table 145. LoadKeyE2 command 0Bh 88
Table 146. LoadKey command 19h 88
Table 147. Authent1 command 0Ch 89
Table 148. Authent2 command 14h 89
Table 149. Limiting values 90
Table 150. Operating condition range 90
Table 151. Current consumption 91
Table 152. Standard input pin characteristics 91
Table 153. Schmitt trigger input pin characteristics 91
Table 154. RSTPD input pin characteristics 92
Table 155. RX input capacitance and input voltage range 92
Table 156. Digital output pin characteristics 92
Table 157. Antenna driver output pin characteristics 93
Table 158. Timing specification for separate read/write strobe 93
Table 159. Common read/write strobe timing specification 94
Table 160. Common read/write strobe timing specification for EPP 95
Table 161. SPI timing specification 97
Table 162. Clock frequency 97
Table 163. EEPROM characteristics 98
Table 164. Signal routed to pin MFOUT 101
Table 165. Analog test signal selection 103
Table 166. Digital test signal selection 104
Table 167. Abbreviations and acronyms 107
Table 168. Revision history 108

All information provided in this document is subject to legal disclaimers.

© NXP Semiconductors N.V. 2015. All rights reserved.

23. Figures

Fig 1. MFRC531 block diagram 4
Fig 2. MFRC531 pin configuration 5
Fig 3. Connection to microprocessor: separate read and write strobes 8
Fig 4. Connection to microprocessor: common read and write strobes 9
Fig 5. Connection to microprocessor: EPP common read/write strobes and handshake. 9
Fig 6. Connection to microprocessor: SPI 10
Fig 7. Key storage format 16
Fig 8. Timer module block diagram 23
Fig 9. The StartUp procedure. 27
Fig 10. Quartz clock connection 29
Fig 11. Receiver circuit block diagram. 33
Fig 12. Automatic Q-clock calibration 34
Fig 13. Serial signal switch block diagram. 36
Fig 14. Crypto1 key handling block diagram 40
Fig 15. Transmitting bit oriented frames 77
Fig 16. Timing for transmitting byte oriented frames 78
Fig 17. Timing for transmitting bit oriented frames. 78
Fig 18. Card communication state diagram 83
Fig 19. EEPROM programming timing diagram. 85
Fig 20. Separate read/write strobe timing diagram 94
Fig 21. Common read/write strobe timing diagram 95
Fig 22. Timing diagram for common read/write strobe; EPP 96
Fig 23. Timing diagram for SPI 97
Fig 24. Application example circuit diagram: directly matched antenna 98
Fig 25. TX control signals 102
Fig 26. RX control signals 103
Fig 27. ISO/IEC 14443 A receiving path Q-clock. 105
Fig 28. Package outline SOT287-1 106

All information provided in this document is subject to legal disclaimers.

© NXP Semiconductors N.V. 2015. All rights reserved.

24. Contents

1 Introduction . . . 1
2 General description . . . 1
3 Features and benefits . . . 2
3.1 General . . . 2
4 Applications . . . 3
5 Quick reference data . . . 3
6 Ordering information . . . 3
7 Block diagram . . . 4
8 Pinning information . . . 5
8.1 Pin description . . . 5
9 Functional description . . . 7
9.1 Digital interface . . . 7
9.1.1 Overview of supported microprocessor interfaces . . . 7
9.1.2 Automatic microprocessor interface detection . 7
9.1.3 Connection to different microprocessor types . 8
9.1.3.1 Separate read and write strobe . . . 8
9.1.3.2 Common read and write strobe . . . 9
9.1.3.3 Common read and write strobe: EPP with handshake . . . 9
9.1.4 Serial Peripheral Interface . . . 9
9.1.4.1 SPI read data . . . 10
9.1.4.2 SPI write data . . . 11
9.2 Memory organization of the EEPROM . . . 12
9.2.1 Product information field (read only) . . . 13
9.2.2 Register initialization files (read/write) . . . 13
9.2.2.1 StartUp register initialization file (read/write) . 14
9.2.2.2 Factory default StartUp register initialization file . . . 14
9.2.2.3 Register initialization file (read/write) . . . 16
9.2.3 Crypto1 keys (write only) . . . 16
9.2.3.1 Key format . . . 16
9.2.3.2 Storage of keys in the EEPROM . . . 17
9.3 FIFO buffer . . . 17
9.3.1 Accessing the FIFO buffer . . . 17
9.3.1.1 Access rules . . . 17
9.3.2 Controlling the FIFO buffer . . . 18
9.3.3 FIFO buffer status information . . . 18
9.3.4 FIFO buffer registers and flags . . . 19
9.4 Interrupt request system . . . 19
9.4.1 Interrupt sources overview . . . 19
9.4.2 Interrupt request handling . . . 20
9.4.2.1 Controlling interrupts and getting their status . 20
9.4.2.2 Accessing the interrupt registers . . . 20
9.4.3 Configuration of pin IRQ . . . 21
9.4.4 Register overview interrupt request system . . 21
9.5 Timer unit . . . 22
9.5.1 Timer unit implementation . . . 23
9.5.1.1 Timer unit block diagram . . . 23
9.5.1.2 Controlling the timer unit . . . 23
9.5.1.3 Timer unit clock and period . . . 24
9.5.1.4 Timer unit status . . . 24
9.5.2 Using the timer unit functions . . . 25
9.5.2.1 Time-out and WatchDog counters . . . 25
9.5.2.2 Stopwatch . . . 25
9.5.2.3 Programmable one shot timer and periodic trigger . . . 25
9.5.3 Timer unit registers . . . 25
9.6 Power reduction modes . . . 26
9.6.1 Hard power-down . . . 26
9.6.2 Soft power-down mode . . . 26
9.6.3 Standby mode . . . 27
9.6.4 Automatic receiver power-down . . . 27
9.7 StartUp phase . . . 27
9.7.1 Hard power-down phase . . . 27
9.7.2 Reset phase . . . 28
9.7.3 Initialization phase . . . 28
9.7.4 Initializing the parallel interface type . . . 28
9.8 Oscillator circuit . . . 29
9.9 Transmitter pins TX1 and TX2 . . . 29
9.9.1 Configuring pins TX1 and TX2 . . . 29
9.9.2 Antenna operating distance versus power consumption . . . 30
9.9.3 Antenna driver output source resistance . . . 30
9.9.3.1 Source resistance table . . . 31
9.9.3.2 Calculating the relative source resistance . . . 32
9.9.3.3 Calculating the effective source resistance . . 32
9.9.4 Pulse width . . . 32
9.10 Receiver circuitry . . . 32
9.10.1 Receiver circuit block diagram . . . 33
9.10.2 Receiver operation . . . 33
9.10.2.1 Automatic Q-clock calibration . . . 33
9.10.2.2 Amplifier . . . 34
9.10.2.3 Correlation circuitry . . . 35
9.10.2.4 Evaluation and digitizer circuitry . . . 35
9.11 Serial signal switch . . . 35
9.11.1 Serial signal switch block diagram . . . 36
9.11.2 Serial signal switch registers . . . 36
9.11.2.1 Active antenna concept . . . 37
9.11.2.2 Driving both RF parts . . . 38
9.12 MIFARE higher baud rates . . . 38
9.13 ISO/IEC 14443 B communication scheme . . . 39
9.14 MIFARE authentication and Crypto1 . . . 40
9.14.1 Crypto1 key handling . . . 40

continued >>

All information provided in this document is subject to legal disclaimers.

© NXP Semiconductors N.V. 2015. All rights reserved.

9.14.2 Authentication procedure 41
10 MFRC531 registers 41
10.1 Register addressing modes 41
10.1.1 Page registers 41
10.1.2 Dedicated address bus 41
10.1.3 Multiplexed address bus 41
10.2 Register bit behavior 42
10.3 Register overview 43
10.4 MFRC531 register flags overview 45
10.5 Register descriptions 48
10.5.1 Page 0: Command and status 48
10.5.1.1 Page register 48
10.5.1.2 Command register 48
10.5.1.3 FIFOData register 49
10.5.1.4 PrimaryStatus register 49
10.5.1.5 FIFOLength register 50
10.5.1.6 SecondaryStatus register 51
10.5.1.7 InterruptEn register 51
10.5.1.8 InterruptRq register 52
10.5.2 Page 1: Control and status 53
10.5.2.1 Page register 53
10.5.2.2 Control register 53
10.5.2.3 ErrorFlag register 53
10.5.2.4 CollPos register 54
10.5.2.5 TimerValue register 55
10.5.2.6 CRCResultLSB register 55
10.5.2.7 CRCResultMSB register 55
10.5.2.8 BitFraming register 56
10.5.3 Page 2: Transmitter and control 57
10.5.3.1 Page register 57
10.5.3.2 TxControl register 57
10.5.3.3 CwConductance register 58
10.5.3.4 ModConductance register 58
10.5.3.5 CoderControl register 59
10.5.3.6 ModWidth register 59
10.5.3.7 PreSet16 register 59
10.5.3.8 TypeBFraming 60
10.5.4 Page 3: Receiver and decoder control 61
10.5.4.1 Page register 61
10.5.4.2 RxControl1 register 61
10.5.4.3 DecoderControl register 62
10.5.4.4 BitPhase register 62
10.5.4.5 RxThreshold register 63
10.5.4.6 BPSKDemControl 63
10.5.4.7 RxControl2 register 64
10.5.4.8 ClockQControl register 64
10.5.5 Page 4: RF Timing and channel redundancy . 65
10.5.5.1 Page register 65
10.5.5.2 RxWait register 65
10.5.5.3 ChannelRedundancy register 65
10.5.5.4 CRCPresetLSB register 66
10.5.5.5 CRCPresetMSB register 66
10.5.5.6 PreSet25 register 66
10.5.5.7 MFOUTSelect register 67
10.5.5.8 PreSet27 register 67
10.5.6 Page 5: FIFO, timer and IRQ pin configuration 68
10.5.6.1 Page register 68
10.5.6.2 FIFOLevel register 68
10.5.6.3 TimerClock register 68
10.5.6.4 TimerControl register 69
10.5.6.5 TimerReload register 69
10.5.6.6 IRQPinConfig register 70
10.5.6.7 PreSet2E register 70
10.5.6.8 PreSet2F register 70
10.5.7 Page 6: reserved 70
10.5.7.1 Page register 70
10.5.7.2 Reserved registers 31h, 32h, 33h, 34h, 35h, 36h and 37h 70
10.5.8 Page 7: Test control 71
10.5.8.1 Page register 71
10.5.8.2 Reserved register 39h 71
10.5.8.3 TestAnaSelect register 71
10.5.8.4 Reserved register 3Bh 72
10.5.8.5 Reserved register 3Ch 72
10.5.8.6 TestDigiSelect register 72
10.5.8.7 Reserved registers 3Eh, 3Fh 73
11 MFRC531 command set 73
11.1 MFRC531 command overview 73
11.1.1 Basic states 75
11.1.2 StartUp command 3Fh 75
11.1.3 Idle command 00h 75
11.2 Commands for ISO/IEC 14443 A card communication 76
11.2.1 Transmit command 1Ah 76
11.2.1.1 Using the Transmit command 76
11.2.1.2 RF channel redundancy and framing 77
11.2.1.3 Transmission of bit oriented frames 77
11.2.1.4 Transmission of frames with more than 64 bytes 77
11.2.2 Receive command 16h 79
11.2.2.1 Using the Receive command 79
11.2.2.2 RF channel redundancy and framing 79
11.2.2.3 Collision detection 80
11.2.2.4 Receiving bit oriented frames 81
11.2.2.5 Communication errors 81
11.2.3 Transceive command 1Eh 82
11.2.4 States of the card communication 82
11.2.5 Card communication state diagram 83
11.3 EEPROM commands 84

continued >>

All information provided in this document is subject to legal disclaimers.

© NXP Semiconductors N.V. 2015. All rights reserved.

11.3.1 WriteE2 command 01h 84
11.3.1.1 Programming process 84
11.3.1.2 Timing diagram 85
11.3.1.3 WriteE2 command error flags 85
11.3.2 ReadE2 command 03h 86
11.3.2.1 ReadE2 command error flags 86
11.4 Diverse commands 86
11.4.1 LoadConfig command 07h 86
11.4.1.1 Register assignment 86
11.4.1.2 Relevant LoadConfig command error flags . . 87
11.4.2 CalcCRC command 12h 87
11.4.2.1 CRC coprocessor settings 87
11.4.2.2 CRC coprocessor status flags 87
11.5 Error handling during command execution . . . 88
11.6 MIFARE security commands 88
11.6.1 LoadKeyE2 command 0Bh 88
11.6.1.1 Relevant LoadKeyE2 command error flags . . 88
11.6.2 LoadKey command 19h 88
11.6.2.1 Relevant LoadKey command error flags 89
11.6.3 Authent1 command 0Ch 89
11.6.4 Authent2 command 14h 89
11.6.4.1 Authent2 command effects 90
12 Limiting values 90
13 Characteristics 90
13.1 Operating condition range 90
13.2 Current consumption 91
13.3 Pin characteristics 91
13.3.1 Input pin characteristics 91
13.3.2 Digital output pin characteristics 92
13.3.3 Antenna driver output pin characteristics 92
13.4 AC electrical characteristics 93
13.4.1 Separate read/write strobe bus timing 93
13.4.2 Common read/write strobe bus timing 94
13.4.3 EPP bus timing 95
13.4.4 SPI timing 97
13.4.5 Clock frequency 97
14 EEPROM characteristics 98
15 Application information 98
15.1 Typical application 98
15.1.1 Circuit diagram 98
15.1.2 Circuit description 99
15.1.2.1 EMC low-pass filter 99
15.1.2.2 Antenna matching 99
15.1.2.3 Receiver circuit 100
15.1.2.4 Antenna coil 100
15.2 Test signals 101
15.2.1 Measurements using the serial signal switch 101
15.2.1.1 TX control 101
15.2.1.2 RX control 102
15.2.2 Analog test signals 103
15.2.3 Digital test signals 104
15.2.4 Examples of ISO/IEC 14443 A analog and digital test signals 104
16 Package outline 106
17 Abbreviations 107
18 References 107
19 Revision history 108
20 Legal information 109
20.1 Data sheet status 109
20.2 Definitions 109
20.3 Disclaimers 109
20.4 Licenses 110
20.5 Trademarks 110
21 Contact information 110
22 Tables 111
23 Figures 114
24 Contents 115

Please be aware that important notices concerning this document and the product(s) described herein, have been included in section 'Legal information'.

© NXP Semiconductors N.V. 2015. All rights reserved.

For more information, please visit: http://www.nxp.com
For sales office addresses, please send an email to: salesaddresses@nxp.com

Date of release: 30 June 2015
056637

Mouser Electronics

Authorized Distributor

Click to View Pricing, Inventory, Delivery & Lifecycle Information:

NXP:

MFRC53101T/0FE,112