MAPD-009492-C2W180

Power Divider, 2-Way 180° Splitter (also a 1:2 flux coupled balun)
5 - 1200 MHz

Rev. V4

Features

- 2-way
- 180° Phase Between Outputs
- Surface Mount Package
- Tape & Reel Packaging
- RoHS* Compliant & 260°C Reflow Compatible

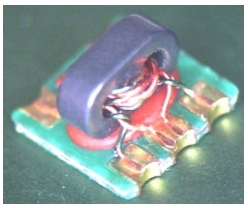

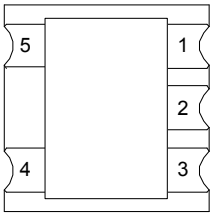

Top View

Description

The MAPD-009492-C2W180 is a 2-way 180˚ power divider in a SM-164 surface mount package.

Ideally suited for high volume broadband CATV applications.

Pin Configuration

Pin #	Function	Pin #	Function
1,2	Ground	4	Output 2
3	Input	5	Output 1

Electrical Specifications: Freq. = 5 - 1200 MHz, T_A = 25°C, Z_0 = 75 Ω, P_{IN} = 0 dBm

Parameter	Frequency Test Conditions (MHz)	Units	Min.	Typ.	Max.
Insertion Loss 1 Pin 5 - 3	5 - 200 200 - 870 870 - 1200	dB	—	0.7 1.3 2.7	1.0 2.5 4.5
Insertion Loss 2 Pin 4 - 3	5 - 50 50 - 870 870 - 1000 1000 - 1200	dB	—	0.6 0.6 0.0 -0.3	1.2 0.9 0.5 0.2
Amplitude Balance (Nominal 0 dB)	5 - 500 500 - 870 870 - 1000 1000 - 1200	dB	—	0.2 1.3 2.4 3.4	±1.0 ±2.5 ±3.5 ±5.0
Phase Balance (Nominal 180º)	5 - 200 200 - 870 870 - 1000 1000 - 1200	°	—	0.1 1.3 4.0 11.0	±3 ±9 ±13 ±20
Input Return Loss Pin 3	5 - 870 870 - 1000 1000 - 1200	dB	18 17 12	24 22 18	—

Absolute Maximum Ratings[1,2]

Parameter	Absolute Maximum
RF Power	50 mW
Peak IF Current	40 mA
Operating Temperature	-40°C to +105°C
Storage Temperature	-40°C to +85°C

1. Exceeding any one or combination of these limits may cause permanent damage to this device.
2. MACOM does not recommend sustained operation near these survivability limits.

Ordering Information

Part Number	Package
MAPD-009492-C2W180	2000 piece reel
MAPD-009492-C2W1TB	customer test board

* Restrictions on Hazardous Substances, European Union Directive 2011/65/EU.

MACOM Technology Solutions Inc. (MACOM) and its affiliates reserve the right to make changes to the product(s) or information contained herein without notice.
Visit www.macom.com for additional data sheets and product information.

For further information and support please visit:
https://www.macom.com/support

Typical Performance Curves

Insertion Loss Port 1 (pin 5 - 3)

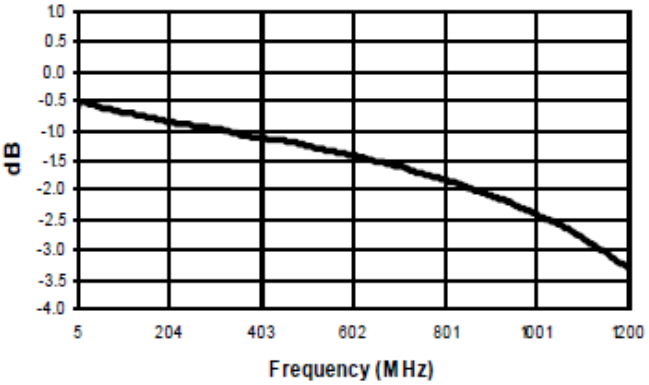

Insertion Loss Port 2 (pin 4 - 3)

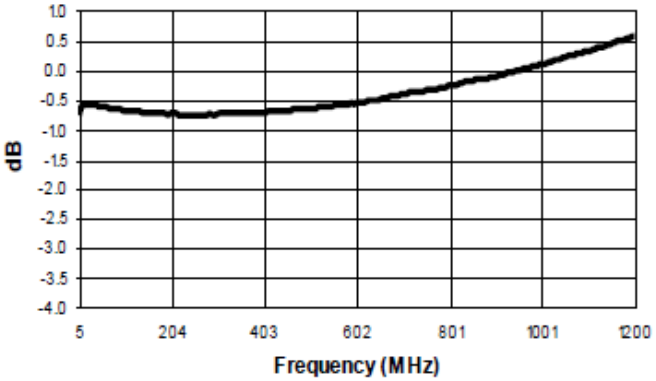

Amplitude Balance

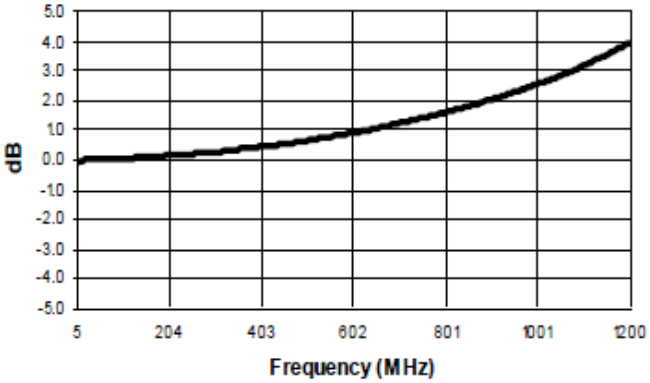

Phase Balance

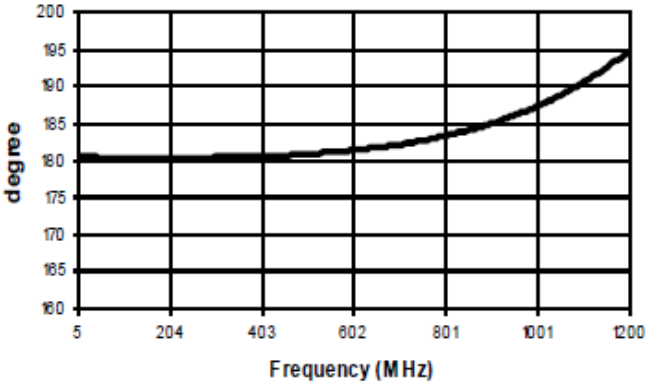

Input Return Loss (pin 3)

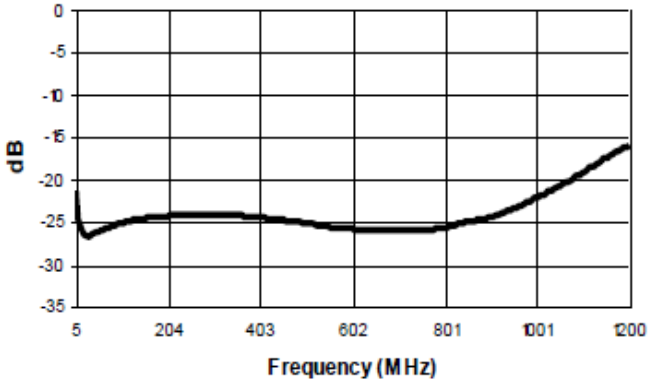

MACOM Technology Solutions Inc. (MACOM) and its affiliates reserve the right to make changes to the product(s) or information contained herein without notice.
Visit www.macom.com for additional data sheets and product information.

For further information and support please visit:
https://www.macom.com/support

Schematic

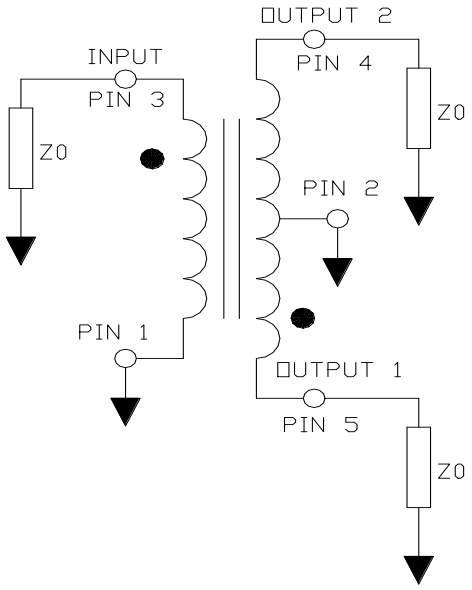

Outline (SM-164)

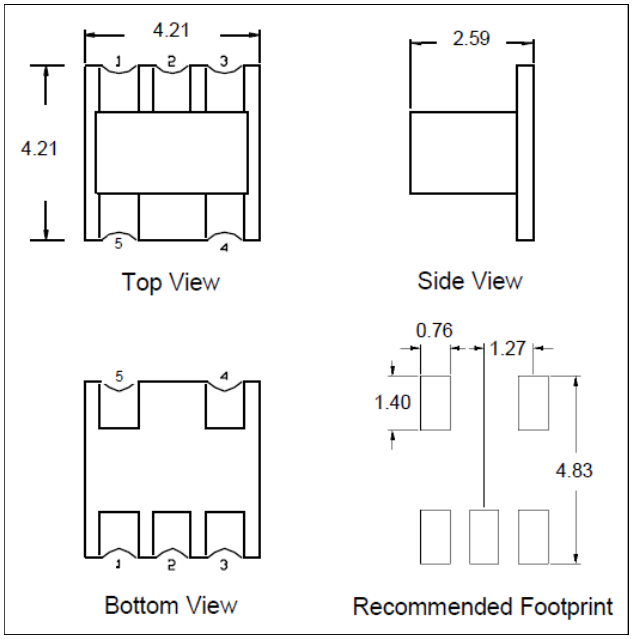

1. Dimensions in mm.
2. Tolerance: ±0.2 mm unless otherwise noted.
3. Model number and lot code printed on reel.
4. Plating finish: ENIG on both sides, 0.05 to 0.1 µm gold over 3 to 6 µm nickel

Tape & Reel Information

Parameter	Units	Value
Qty per reel	-	2000
Reel Size	mm	330
Tape Width	mm	12.00
Pitch	mm	8.00
Ao	mm	4.5
Bo	mm	4.5
Ko	mm	2.73
Orientation	-	F5
Reference Application Note ANI-019 for orientation		

MACOM Technology Solutions Inc. (MACOM) and its affiliates reserve the right to make changes to the product(s) or information contained herein without notice.
Visit www.macom.com for additional data sheets and product information.

For further information and support please visit:
https://www.macom.com/support

MACOM Technology Solutions Inc. All rights reserved.

Information in this document is provided in connection with MACOM Technology Solutions Inc ("MACOM") products. These materials are provided by MACOM as a service to its customers and may be used for informational purposes only. Except as provided in MACOM's Terms and Conditions of Sale for such products or in any separate agreement related to this document, MACOM assumes no liability whatsoever. MACOM assumes no responsibility for errors or omissions in these materials. MACOM may make changes to specifications and product descriptions at any time, without notice. MACOM makes no commitment to update the information and shall have no responsibility whatsoever for conflicts or incompatibilities arising from future changes to its specifications and product descriptions. No license, express or implied, by estoppels or otherwise, to any intellectual property rights is granted by this document.

THESE MATERIALS ARE PROVIDED "AS IS" WITHOUT WARRANTY OF ANY KIND, EITHER EXPRESS OR IMPLIED, RELATING TO SALE AND/OR USE OF MACOM PRODUCTS INCLUDING LIABILITY OR WARRANTIES RELATING TO FITNESS FOR A PARTICULAR PURPOSE, CONSEQUENTIAL OR INCIDENTAL DAMAGES, MERCHANTABILITY, OR INFRINGEMENT OF ANY PATENT, COPYRIGHT OR OTHER INTELLECTUAL PROPERTY RIGHT. MACOM FURTHER DOES NOT WARRANT THE ACCURACY OR COMPLETENESS OF THE INFORMATION, TEXT, GRAPHICS OR OTHER ITEMS CONTAINED WITHIN THESE MATERIALS. MACOM SHALL NOT BE LIABLE FOR ANY SPECIAL, INDIRECT, INCIDENTAL, OR CONSEQUENTIAL DAMAGES, INCLUDING WITHOUT LIMITATION, LOST REVENUES OR LOST PROFITS, WHICH MAY RESULT FROM THE USE OF THESE MATERIALS.

MACOM products are not intended for use in medical, lifesaving or life sustaining applications. MACOM customers using or selling MACOM products for use in such applications do so at their own risk and agree to fully indemnify MACOM for any damages resulting from such improper use or sale.