PLEASE CHECK WWW.MOLEX.COM FOR LATEST PART INFORMATION

Part Number: 0512811694

Status: Active

Overview: FFC-FPC (SMT)

Description: 0.50mm Pitch Easy-On FFC/FPC Connector, Surface Mount, Right-Angle, Non-ZIF, Dual Contact Style, 1.20mm Mated Height, 16 Circuits, Gold (Au) Plating

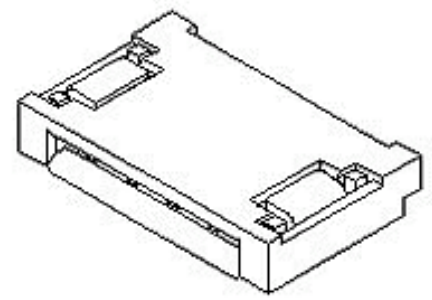

Series image - Reference only

Documents:

3D Model
Drawing (PDF)
Product Specification PS-51281-003-001 (PDF)
Packaging Specification SPK-51281-001-001 (PDF)
RoHS Certificate of Compliance (PDF)

General

Product Family	FFC/FPC Connectors
Series	51281
Overview	FFC-FPC (SMT)
Product Name	Easy-On
UPC	822348699995

Physical

Actuator Type	Non-ZIF
Circuits (Loaded)	16
Color - Resin	Natural
Contact Position	Dual
Durability (mating cycles max)	20
Mated Height	1.20mm
Material - Metal	Phosphor Bronze
Material - Plating Mating	Gold
Material - Plating Termination	Tin
Net Weight	100.047/mg
Number of Rows	1
Orientation	Right Angle
PCB Locator	No
PCB Mounting	Surface Mount
PCB Retention	Yes
Packaging Type	Embossed Tape on Reel
Pitch - Mating Interface	0.50mm
Plating min - Mating	0.102µm
Plating min - Termination	1.016µm
Polarized to PCB	Yes
Stackable	No
Surface Mount Compatible (SMC)	N/A
Temperature Range - Operating	-20° to +85°C
Wire/Cable Type	FFC/FPC

Electrical

Current - Maximum per Contact	0.5A
Voltage - Maximum	50V

Material Info

Reference - Drawing Numbers

Packaging Specification	SPK-51281-001-001
Product Specification	PS-51281-003-001
Sales Drawing	SD-51281-011, SD-51281-012

EU ELV
Not Relevant

EU RoHS
Compliant

China RoHS

REACH SVHC
Not Contained Per -ED/88/2018 (15 January 2019)

Halogen-Free Status
Low-Halogen

For more information, please visit Contact US

China ROHS	Green Image
ELV	Not Relevant
RoHS Phthalates	Not Contained

Search Parts in this Series
51281 Series

PLEASE CHECK WWW.MOLEX.COM FOR LATEST PART INFORMATION

Mouser Electronics

Authorized Distributor

Click to View Pricing, Inventory, Delivery & Lifecycle Information:

Molex:
51281-1694