THIS DRAWING IS UNPUBLISHED. RELEASED FOR PUBLICATION -,- .
© COPYRIGHT - By - TE CONNECTIVITY ALL RIGHTS RESERVED.

LOC	DIST
CM	54

REVISIONS

P	LTR	DESCRIPTION	DATE	DWN	APVD
	Y2	REVISED PER ECR-17-018319	12JAN2018	BDA	SG

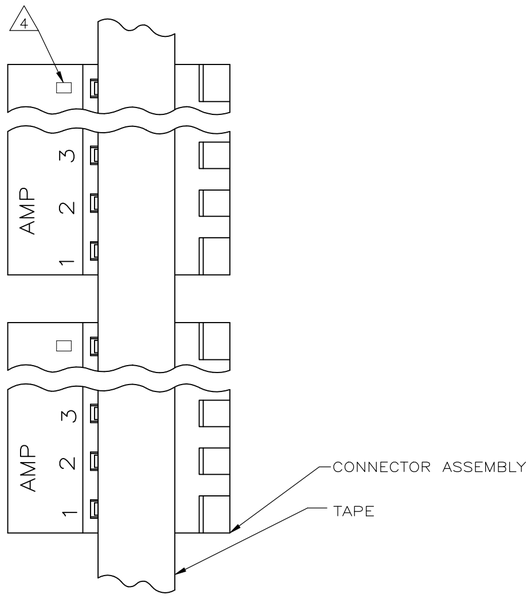

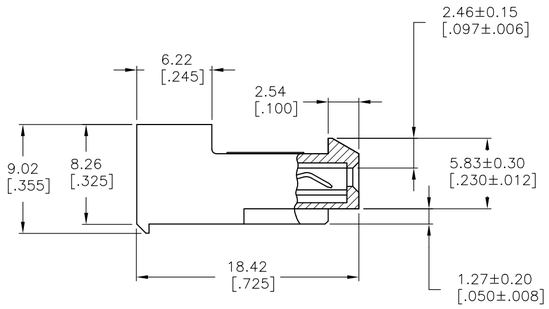

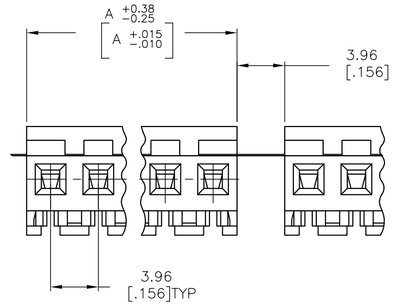

	DIM A		NO OF CIRCUITS	PART NO
	95.10	[3.744]	24	5-640474-4
	91.13	[3.588]	23	5-640474-3
	87.17	[3.432]	22	5-640474-2
	83.21	[3.276]	21	5-640474-1
	79.25	[3.120]	20	5-640474-0
	75.29	[2.964]	19	4-640474-9
	71.32	[2.808]	18	4-640474-8
	67.36	[2.652]	17	4-640474-7
	63.40	[2.496]	16	4-640474-6
	59.44	[2.340]	15	4-640474-5
	55.47	[2.184]	14	4-640474-4
	51.51	[2.028]	13	4-640474-3
	47.55	[1.872]	12	4-640474-2
	43.59	[1.716]	11	4-640474-1
	39.62	[1.560]	10	4-640474-0
	35.66	[1.404]	9	3-640474-9
	31.70	[1.248]	8	3-640474-8
	27.74	[1.092]	7	3-640474-7
	23.77	[.936]	6	3-640474-6
	19.81	[.780]	5	3-640474-5
	15.85	[.624]	4	3-640474-4
	11.89	[.468]	3	3-640474-3
	7.92	[.312]	2	3-640474-2
SUPERSEDED 7	95.10	[3.744]	24	~~2-640474-4~~
	91.13	[3.588]	23	~~2-640474-3~~
	87.17	[3.432]	22	~~2-640474-2~~
	83.21	[3.276]	21	~~2-640474-1~~
	79.25	[3.120]	20	~~2-640474-0~~
	75.29	[2.964]	19	~~1-640474-9~~
	71.32	[2.808]	18	~~1-640474-8~~
	67.36	[2.652]	17	~~1-640474-7~~
	63.40	[2.496]	16	~~1-640474-6~~
	59.44	[2.340]	15	~~1-640474-5~~
	55.47	[2.184]	14	~~1-640474-4~~
	51.51	[2.028]	13	~~1-640474-3~~
	47.55	[1.872]	12	~~1-640474-2~~
	43.59	[1.716]	11	~~1-640474-1~~
	39.62	[1.560]	10	~~1-640474-0~~
	35.66	[1.404]	9	~~640474-9~~
	31.70	[1.248]	8	~~640474-8~~
	27.74	[1.092]	7	~~640474-7~~
	23.77	[.936]	6	~~640474-6~~
	19.81	[.780]	5	~~640474-5~~
8 SUPERSEDED	15.85	[.624]	4	~~640474-4~~
7 SUPERSEDED	11.89	[.468]	3	~~640474-3~~
	7.92	[.312]	2	~~640474-2~~

1. MATERIAL: CONTACTS - 0.30[.012] THICK COPPER ALLOY
BRIGHT TIN-LEAD 0.00203[.000080] MIN THICK FOR CONTACTS
640474-2 THRU 2-640474-4
MATTE WHISKER MITIGATED TIN 0.00203[.000080] MIN THICKNESS
OVER NICKEL UNDERPLATE FOR 3-640474-2 THRU 5-640474-4

2. CONTACTS ACCEPT 22 AWG WIRE WITH 2.41[.095] MAX INSULATION DIAMETER.

3. CONTACTS MUST ACCEPT 1.14±0.03[.045±.001] SQUARE POST AND REMAIN LOCKED IN POSITION.

4. IDENTIFICATION NUMBER FOR LAST CIRCUIT MAY NOT APPEAR ON ALL ASSEMBLIES.

5. DIMENSIONS IN BRACKETS ARE IN INCHES.

6. HOUSING FEATURES ARE: CLOSED END WITH LOCKING RAMP.

7. OBSOLETE PARTS: OBSOLETE CIS STREAMLINING PER D.RENAUD/D.SINISI

8. OBSOLETE PARTS

THIS DRAWING IS A CONTROLLED DOCUMENT.

DIMENSIONS: mm [INCHES]

TOLERANCES UNLESS OTHERWISE SPECIFIED:
0 PLC ± -
1 PLC ± -
2 PLC ± -
3 PLC ± 0.13 [.005]
4 PLC ± -
ANGLES ± -

MATERIAL 1
FINISH 1

DWN B. LEWIS 2-12-91
CHK R. SWING 2-12-91
APVD - -
PRODUCT SPEC 108-1051
APPLICATION SPEC 114-1020
WEIGHT

TE Connectivity

NAME MTA-156 CONNECTOR ASSEMBLY, 22 AWG, STANDARD TAPE MOUNTED

SIZE	CAGE CODE	DRAWING NO	RESTRICTED TO
A1	00779	C-640474	-

CUSTOMER DRAWING SCALE 4:1 SHEET 1 OF 1 REV Y2

4805 (3/11)