Feb.1.2020 Copyright 2020 HIROSE ELECTRIC CO., LTD. All Rights Reserved.
In case of consideration for using Automotive equipment / device which demand high reliability, kindly contact our sales window correspondents.

	COUNT	DESCRIPTION OF REVISIONS	BY	CHKD	DATE		COUNT	DESCRIPTION OF REVISIONS	BY	CHKD	DATE
△					. .	△					. .
△					. .	△					. .
△					. .	△					. .

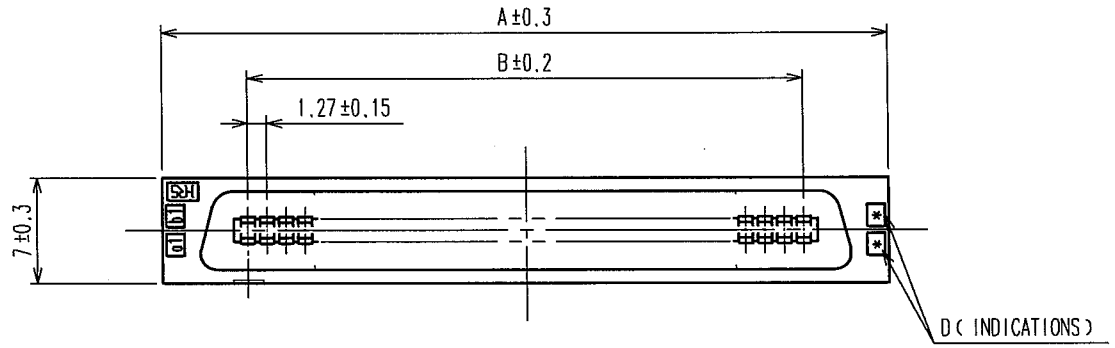

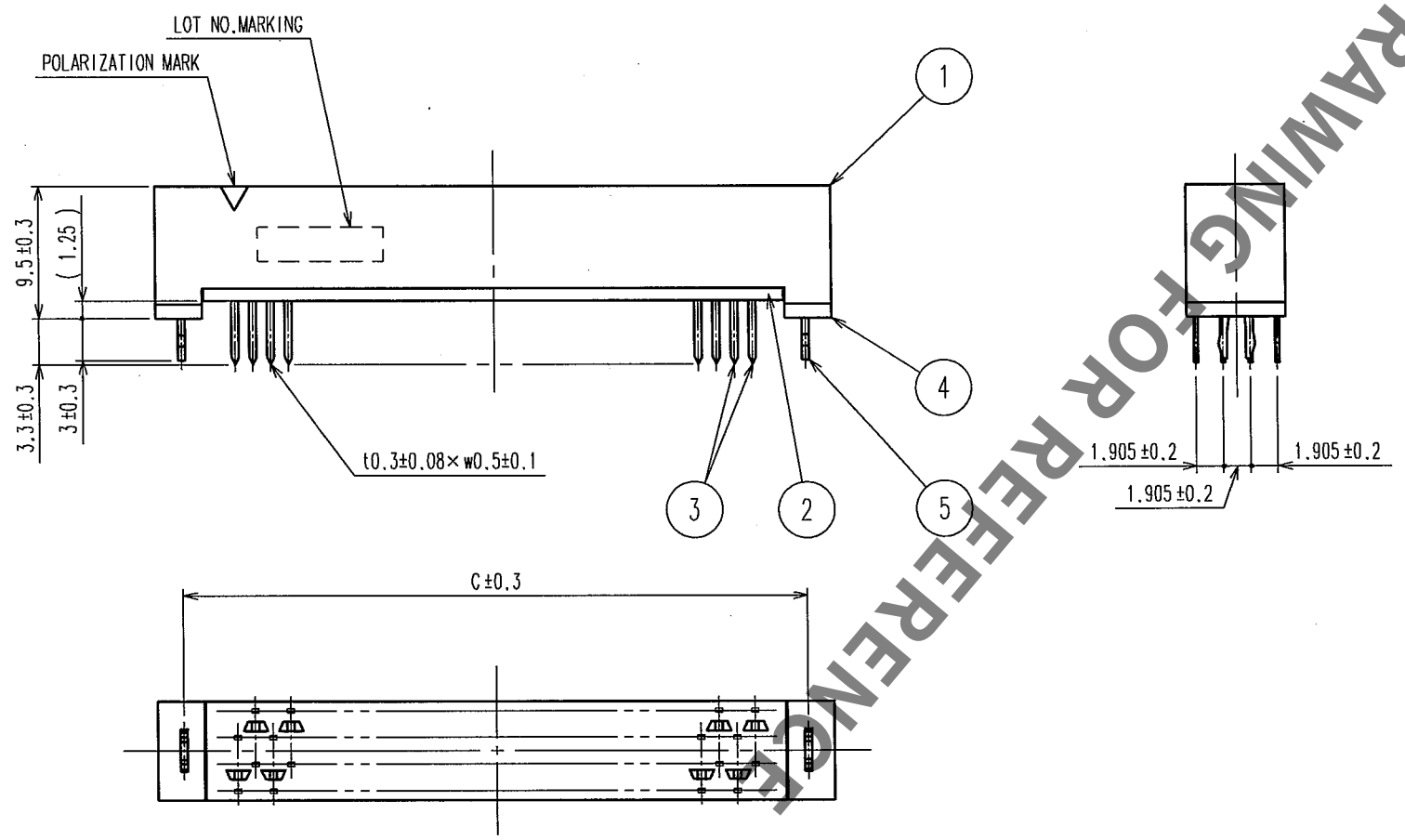

RECOMMENDEND PC BOARD HOLE PATTERN(MOUNTING SIDE)
t=1.6

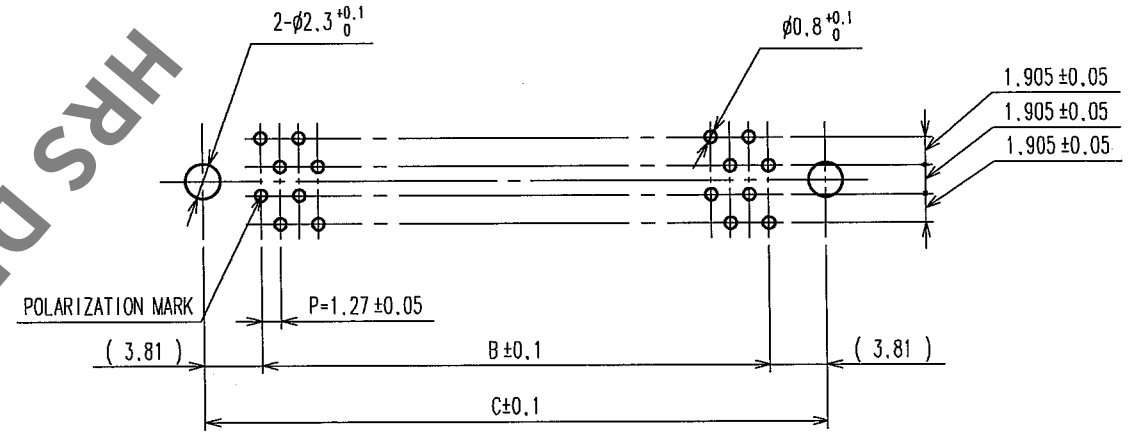

PART No.	CODE No.	2	A	B	C	D
FX2C1-20P-1.27DSAL(71)	CL572-2261-0-71	20	22.75	11.43	19.05	10
FX2C1-32P-1.27DSAL(71)	CL572-2262-2-71	32	30.37	19.05	26.67	16
FX2C1-40P-1.27DSAL(71)	CL572-2263-5-71	40	35.45	24.13	31.75	20
FX2C1-52P-1.27DSAL(71)	CL572-2264-8-71	52	43.07	31.75	39.37	26
FX2C1-60P-1.27DSAL(71)	CL572-2265-0-71	60	48.15	36.83	44.45	30
FX2C1-68P-1.27DSAL(71)	CL572-2266-3-71	68	53.23	41.91	49.53	34
FX2C1-80P-1.27DSAL(71)	CL572-2267-6-71	80	60.85	49.53	57.15	40
FX2C1-100P-1.27DSAL(71)	CL572-2268-9-71	100	73.55	62.23	69.85	50
FX2C1-120P-1.27DSAL(71)	CL572-2269-1-71	120	86.25	74.93	82.55	60

NOTES 1. THE DIMENSIONS IN PARENTHESES ARE FOR REFERENCE.
2 NUMBER OF PIN.

HRS DRAWING FOR REFERENCE

NO.	MATERIAL	FINISH, REMARKS	NO.	MATERIAL	FINISH, REMARKS
5	PHOSPHOR BRONZE	TIN-PLATING	3	PHOSPHOR BRONZE	CONTACT AREA:GOLD 0.2μm min
4	POLYAMIDE	BLACK UL94V-0			DIP AREA:TIN-PLATING 2μm min
1,2	POLYAMIDE	BLACK UL94V-0			UNDER PLATING:NICKEL 2μm min

CODE NO.(OLD)	DRAWN	DESIGNED	CHECKED	APPROVED	RELEASED
CL	I.OKAYAMA	K.NAKAMURA	H.OKAWA	H.OKAWA	. .
	04.06.02	04.06.02	04.06.09	04.06.09	

SCALE FREE
UNITS mm
DRAWING NO. EDC3-083048-21
HRS HIROSE ELECTRIC CO., LTD
PART NO. FX2C1-**P-1.27DSAL(71)
CODE NO. CL572
1/1

TO
PCK