THIS DRAWING IS UNPUBLISHED. RELEASED FOR PUBLICATION - ,- .
© COPYRIGHT - - ALL RIGHTS RESERVED.

PART NUMBER	REV	FIRST USED
1385459-1	K	122500-1
1385459-2	K	565435-5
1385459-3	J	354500-1

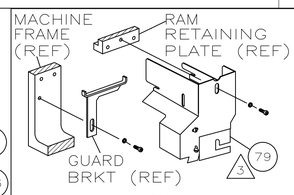

AMP-O-LECTRIC TM TERM GUARD

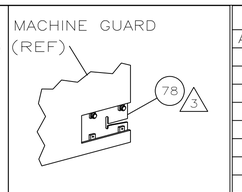

G TERMINATOR GUARD

TERMINAL NAME: TERMINAL, FEMALE

AMP TERM PN	MFR TERM PN
1572127	02965141
1572983	02965510

DELPHI TERMINAL CUSTOMER CRIMP SPECS

PAD LTR	CRIMP HEIGHT	WIRE SIZE
A	.060 ±.002 [1.52 ±0.05mm]	16 AWG △7
B	.059 ±.002 [1.50 ±0.05mm]	1mm²
C	.057 ±.002 [1.45 ±0.05mm]	0.8mm² or 18 AWG
D	.055 ±.002 [1.40 ±0.05mm]	0.5mm² or 20 AWG

CRIMP	SIZE	TYPE	RANGE
WIRE	.110 [2.79mm]		0.5-1mm²
INSUL	.140 [3.56mm]	0	∅.125

WIRE STRIP LENGTH	TERM APPL SPEC	FEED	APPL INSTRUCTION	SET UP GAGE	LAYOUT
.188-.219	NONE		408-8040	458637-1	L2699

REVISIONS

P	LTR	DESCRIPTION	DATE	DWN	APVD
	K	ECR-17-002010	FEB2017	RS	LZ

-1	LEADMAKER			MECH POST FEED			
-2	BENCH MODEL K			MECH PRE FEED			
-3	BENCH MODEL G			MECH PRE FEED			
1	1	1	–	B	22594-8	NUT,HEX(1/2-20)	70
1	1	1	–	B	240628-1	PLATE, ADJUSTMENT	69
1	1	1	–	B	240626-1	SHAFT, PIVOT	68
1	1	1	–	B	240633-1	BUSHING	67
1	1	1	–	A	455680-1	LEVER, INTERMEDIATE	66
1	1	1	–	B	240629-1	BLOCK, PIVOT	65
1	1	1	–	A	240632-2	SCREW, ADJ FEED ROD	64
1	1	1	–	B	240659-3	PIN, CAM ROLLER	63
1	1	1	–	B	240658-1	ROLLER, CAM	62
1	1	1	–	B	454398-2	ROD, FEED	61
1	1	1	–	A	1804305-2	GUIDE, FEED ROD	60
1	1	1	–	C	454220-1	CAP, RAM	59
1	1	1	–	D	454485-1	HOUSING	58
							57
1	1	1	–	B	3-694433-9	PAWL, FEED	56
1	1	1	–	B	240624-1	PIN, FEED FINGER	55
1	1	1	–	B	691499-1	SPRING, FEED FINGER	54
1	1	1	–	B	690541-1	HOLDER, FEED FINGER	53
1	1	1	–	A	455679-1	LEVER, TERMINAL FEED ARM	52
							51
							50
1	–	–	–	B	690602-6	CAM, PRE-FEED 1 5/8 ST	49
–	1	–	–	B	690602-5	CAM, PRE-FEED 1 1/8 ST	48
–	–	1	–	B	690501-4	CAM, POST-FEED 1 5/8 ST	47
							46
1	1	1	–	A	690191-1	PLUG, NYLON	45
1	1	1	–	C	455673-1	RAM	44
1	1	1	–	A	690125-1	WASHER, LAMINATED	43
1	1	1	–	A	690124-1	WASHER, RAM	42
1	1	1	–	A	7-21002-9	BOLT, CRIMPER(5/16x1.00)	41
1	1	1	–	A	23241-6	BALL, STEEL	40
1	1	1	–	A	690170-1	SPRING, COMPRESSION	39
1	1	1	–	C	690142-1	DISC, INSULATION	38
1	1	1	–	D	354777-1	WIRE DISC, PLASTIC	37
1	1	1	–	A	22480-5	WASHER, SPRING	36
1	1	1	–	B	690212-1	POST, RAM	35
							34
1	1	1	–	D	455675-3	PLATE, BASE	33
1	1	1	–	A	690432-3	ADJUSTMENT SCREW	32
							31
1	1	1	–	B	455689-1	BLOCK, STRIP GUIDE ADJ	30
1	1	1	–	C	1-844048-7	PLATE, STRIP GUIDE	29
							28
2	2	2	–	A	22284-1	SPRING, DRAG	27
1	1	1	–	B	240793-1	LEVER, DRAG RELEASE	26
1	1	1	–	B	1673009-1	DRAG, TERMINAL	25
1	1	1	–	D	690438-4	GUIDE, STRIP (REAR)	24
1	1	1	–	A	3-189124-0	GUIDE, STRIP (FRONT)	23
–	–	1	–	B	690472-2	STRIPPER	22
1	1	1	–	A	4-22284-9	SPRING, FEED RETURN	21
							20
1	1	–	–	B	691353-1	STRIPPER	19
							18
							17
							16
△1 1	1	1	–	C	1673256-2	PLATE, SHEAR (REAR)	15
1	1	1	–	C	1673255-1	HOLDER, SHEAR (REAR)	14
△1 1	1	1	–	C	1673257-2	SHEAR, FLOAT (REAR)	13
1	1	1	–	A	3-22280-3	SPRING, SHEAR	12
1	1	1	–	A	1-21000-9	STOP, SHEAR	11
							10
1	1	1	–	A	21055-5	WASHER,FLAT (#6) SHEAR STOP	9
△1 1	1	1	–	C	2-662189-9	ANVIL	8
1	1	1	–	C	4-240641-7	SPACER, DEPRESSOR (REAR)	7
1	1	1	–	B	690468-6	DEPRESSOR, SHEAR (REAR)	6
							5
1	1	1	–	B	1-238009-1	SPACER, BLOCK CRIMPER	4
△1 1	1	1	–	C	4-683454-8	CRIMPER, INSULATION	3
1	1	1	–	C	1-455888-0	SPACER, CRIMPER	2
△1 1	1	1	–	C	456408-8	CRIMPER, WIRE	1
-3	-2	-1	U/M	DWG SIZE	PART NO	DESCRIPTION	ITEM NO

QTY REQD PER ASSY — PARTS LIST

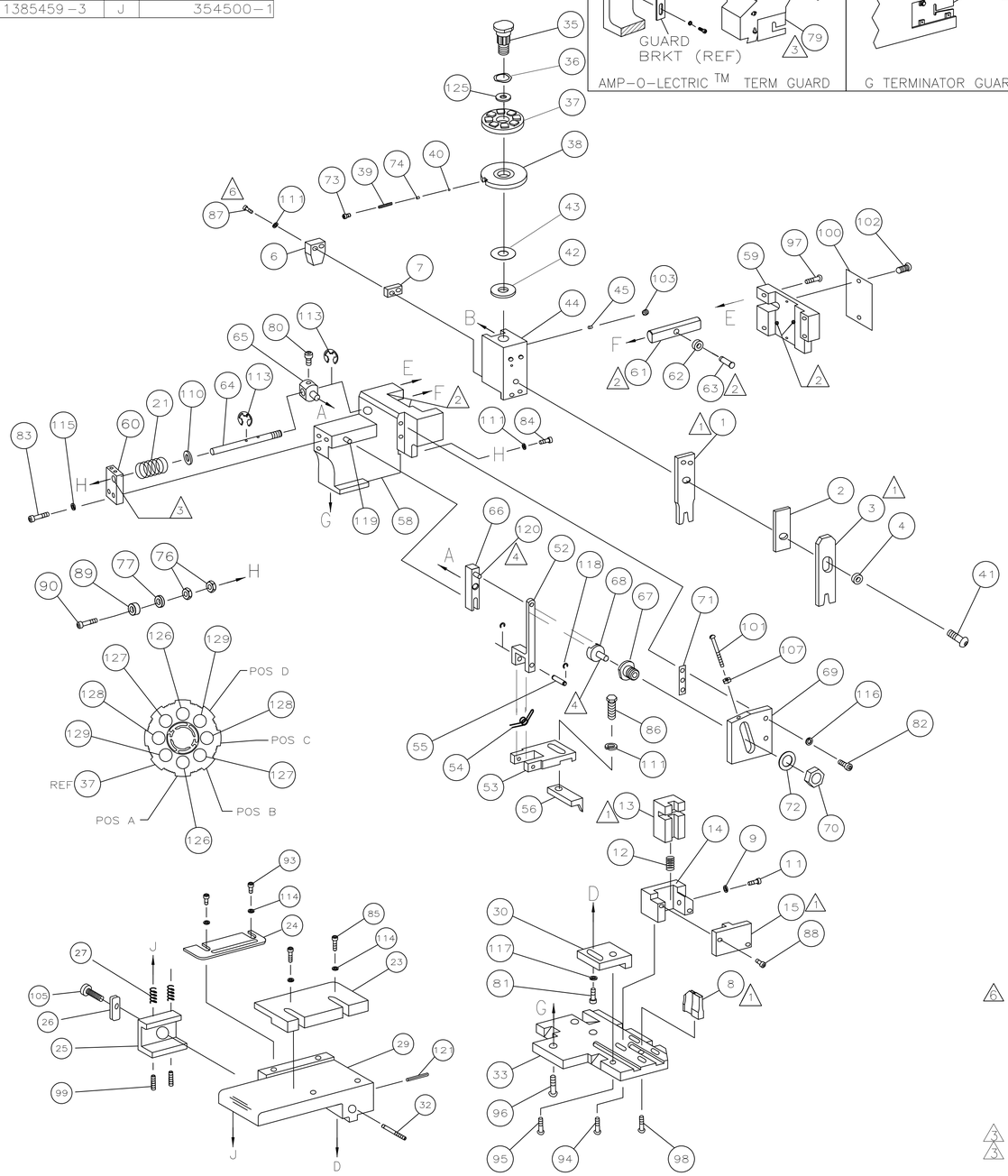

2	2	2	–	C	3-354779-0	PIN, WIRE DISC (.3140)D	129
2	2	2	–	C	2-354779-8	PIN, WIRE DISC (.3130)C	128
2	2	2	–	C	2-354779-2	PIN, WIRE DISC (.3100)B	127
2	2	2	–	C	2-354779-2	PIN, WIRE DISC (.3100)A	126
1	1	1	–	A	986950-1	WASHER, FLAT PRECISION	125
1	1	1	–	A	217238-1	GENERAL INSTRUCTION PACKAGE	124
1	1	1	–	–	4088040	SF APPL INST 408-8040	123
							122
1	1	1	–	A	4-21028-0	PIN, SLTD SPRG(∅.094x.75)	121
1	1	1	–	A	1-21030-1	PIN,DOWEL(∅.187x.50)LEVER	120
1	1	1	–	A	1-21030-6	PIN,DOWEL(∅.187x1.25)HOUSING	119
2	2	2	–	A	21045-3	RING,RET "C"(∅.187)FD FING PIN	118
1	1	1	–	A	21024-5	WASHER, LOCK(#10)ADJ BLOCK	117
2	2	2	–	A	21024-5	WASHER,LOCK(#10)ADJ PLATE	116
2	2	2	–	A	21024-5	WASHER,LOCK(#10)FEED GDE ROD	115
4	4	4	–	A	21024-2	WASHER,LOCK(#4)FRONT STP GUIDE	114
2	2	2	–	A	1-21046-6	RING,RETAIN(5/16 EXT)ADJ ROD	113
							112
4	4	4	–	A	21024-4	WASHER,LOCK(#8)STRIPPER	111
1	1	1	–	A	21899-4	WASHER,FLAT(∅5/16)SCREW ADJ	110
							109
							108
1	1	1	–	A	21068-5	NUT,HEX(6-32)FEED ADJ	107
							106
1	1	1	–	A	22353-8	SCR,SHLD,SLOT HEAD(8-32)	105
							104
1	1	1	–	A	21009-2	SCR,SKT SET(1/4-20x.25 LW)RAM	103
2	2	2	–	A	21017-2	SCR,DRIVE(#2x.19)ID PLATE	102
1	1	1	–	A	6-23715-5	SCR,PAN HD(6-32x1.50)FEED ADJ	101
1	1	1	–	B	461264-1	PLATE, IDENTIFICATION	100
2	2	2	–	A	5-21006-6	SCR,SET (10-32x.75)DRAG	99
1	1	1	–	A	22733-8	SCR,BHC(8-32x.38 LW)ANVIL	98
4	4	4	–	A	2-21002-9	SCR,BHC(10-32x.75)CAP	97
3	3	3	–	A	2-22733-8	SCR,BHC(1/4-20x.62)HOUSING	96
1	1	1	–	A	2-21002-7	SCR,BHC(10-32x.50)SG ADJ BLOCK	95
2	2	2	–	A	2-21002-2	SCR,BHC(8-32x.50)TERM H DWN	94
2	2	2	–	A	1-21000-3	SCR,BHC(4-40x.25)R STP GDE	93
							92
1	1	1	–	A	1-21002-7	SCR,BHC(6-32x.38)CAM	91
							90
							89
2	2	2	–	A	1-21000-9	SCR,SHC(6-32x.38)R SHEAR PLATE	88
△6 2	2	2	–	A	3-21000-0	SCR,SKT CAP (8-32x.81) R DEP	87
1	1	1	–	A	2-22603-0	SCR,HEX HD(8-32x.31)FEED FINGER	86
2	2	2	–	A	1-21000-6	SCR,SHC(4-40x.38)FR ST GUIDE	85
1	1	1	–	A	2-21000-7	SCR,SHC(8-32x.50)STRIPPER	84
2	2	2	–	A	3-21000-7	SCR,SHC(10-32x.75)FEED ROD GD	83
2	2	2	–	A	3-21000-6	SCR,SHC(10-32x.62)FD ADJ BLK	82
1	1	1	–	A	3-21000-4	SCR,SHC(10-32x.38)SG ADJ BL	81
1	1	1	–	A	3-21000-4	SCR,SHC(10-32x.38)PIVOT BLK	80
△2 –	REF	–	–	B	455749-1	GUARD, WINDOW	79
△3 REF	–	–	–	B	679532-1	INSERT, GUARD	78
							77
							76
							75
1	1	1	–	A	690603-1	SPRING, ASSIST	74
1	1	1	–	A	23030-1	SCR,SHC(6-32x.25 SL)INS DISC	73
1	1	1	–	A	458109-1	WASHER, SPECIAL	72
1	1	1	–	A	690517-1	SPACER	71
-3	-2	-1	U/M	DWG SIZE	PART NO	DESCRIPTION	ITEM NO

QTY REQD PER ASSY — PARTS LIST

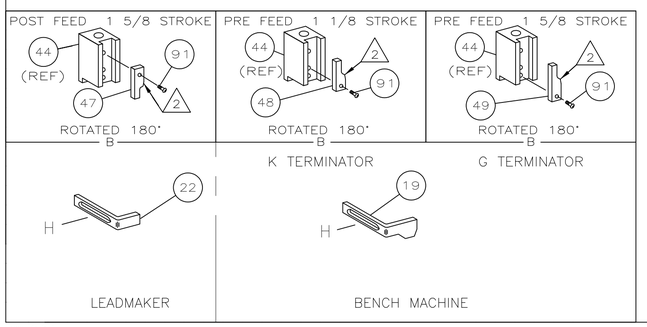

△1 RECOMMENDED SPARE PARTS.

△2 GREASE LIGHTLY.

△3 GUARD MUST BE IN PLACE WHEN OPERATING APPLICATOR IN A BENCH MACHINE.

△4 LUBRICATE DAILY USING NO. 20 MACHINE OIL.

5. ITEMS WITH QTY OF REF SPECIFIED (EXCEPT ITEMS 78 AND 79) ARE USED ON ITEM 46.

△6 CUT TO LENGTH AT ASSEMBLY.

△7 16 AWG WIRE SIZE NOT RECOMMENDED BY TERMINAL MANUFACTURER.

THIS DRAWING IS A CONTROLLED DOCUMENT.

DIMENSIONS: INCHES

TOLERANCES UNLESS OTHERWISE SPECIFIED:
0 PLC ± –
1 PLC ± –
2 PLC ± –
3 PLC ± –
4 PLC ± –
ANGLES ± –

MATERIAL –
FINISH –

DWN	R.O.WILSON	12AUG02
CHK	R.KNEPPER	10SEP02
APVD	T.ELBIN	12AUG02
PRODUCT SPEC	—	
APPLICATION SPEC	—	
WEIGHT	0	

TE Connectivity

NAME: SIDE FEED HDM APPLICATOR

SIZE	CAGE CODE	DRAWING NO	RESTRICTED TO
A1	00779	C-1385459	—

CUSTOMER DRAWING — SCALE – — SHEET 1 OF 1 — REV K

4805 (1/15)

CUSTOMER AND ASSEMBLY DRAWING

Mouser Electronics

Authorized Distributor

Click to View Pricing, Inventory, Delivery & Lifecycle Information:

TE Connectivity:

1385459-1