DRAWING MADE IN THIRD ANGLE PROJECTION
THIS DRAWING IS UNPUBLISHED. RELEASED FOR PUBLICATION .19 .
© COPYRIGHT 19 BY AMP INCORPORATED. ALL INTERNATIONAL RIGHTS RESERVED.

MOD	LOC	DIST
18	GP	00

REVISIONS

ZONE	LTR	DESCRIPTION	DATE	APPD
	A1	REV PER ECO-09-023313	13OCT09	AEG
	A	REV PER EC 0S13-0177-03	5-03	CR

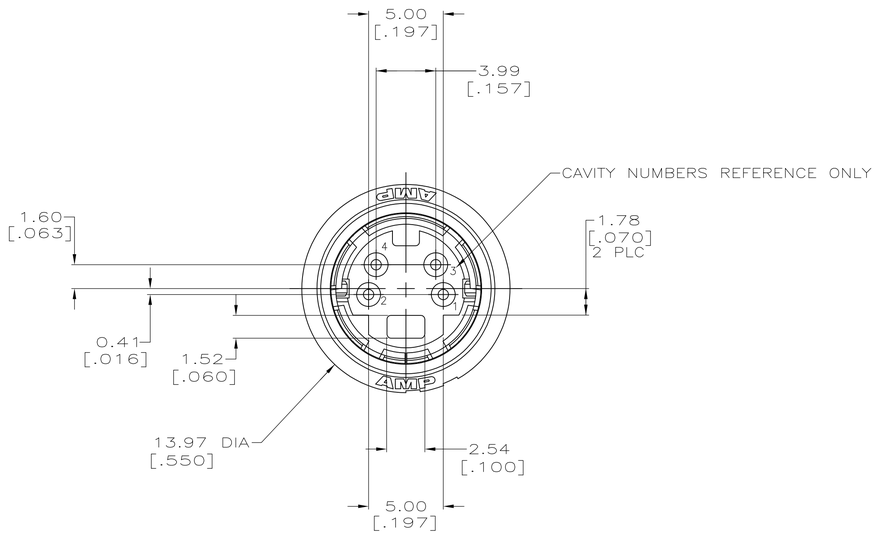

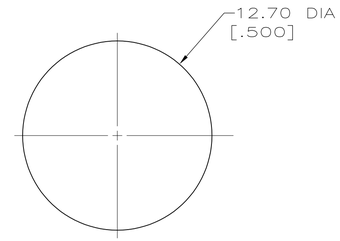

RECOMMENDED PANEL CUT-OUT

1. SHELL: BRASS; CONTACTS: PHOSPHOR BRONZE; HOUSING: POLYESTER, UL 94V-O RATED, BLACK.
2. 0.76 μm [.000030] MIN GOLD ON MATING END FOR A LENGTH OF 1.37[.054] MIN ON INSIDE, 2.54 μm [.000100] MIN TIN-LEAD FOR A LENGTH OF 3.30[.130] MIN FROM OPPOSITE END, ALL OVER 1.27 μm [.000050] MIN NICKEL.
3. 0.38 μm [.000015] MIN GOLD ON MATING END FOR A LENGTH OF 1.37[.054] MIN ON INSIDE, 2.54 μm [.000100] MIN TIN-LEAD FOR A LENGTH OF 3.30[.130] MIN FROM OPPOSITE END, ALL OVER 1.27 μm [.000050] MIN NICKEL.
4. 2.54 μm [.000100] MIN TIN-LEAD OVER 1.27 μm [.000050] MIN NICKEL.
5. GOLD PLATING PER MIL-G-45204, TIN PLATING PER MIL-T-10727, NICKEL PLATING PER QQ-N-290.
6. RECEPTACLE ASSEMBLY MATES WITH 4 PIN, 8.99±0.10[.354±.004] DIAMETER PLUG.
7. 2.54 μm [.000100] MIN TIN OVER 1.27 μm [.000050] MIN NICKEL.
8. OBSOLETE PARTS: OBSOLETE CIS STREAMLINING PER D.RENAUD/D.SINISI

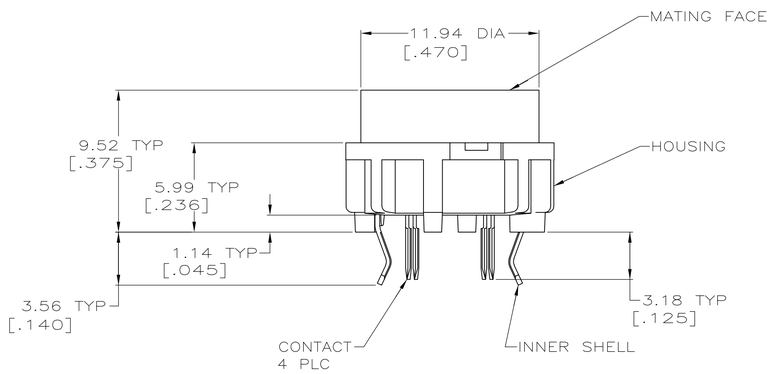

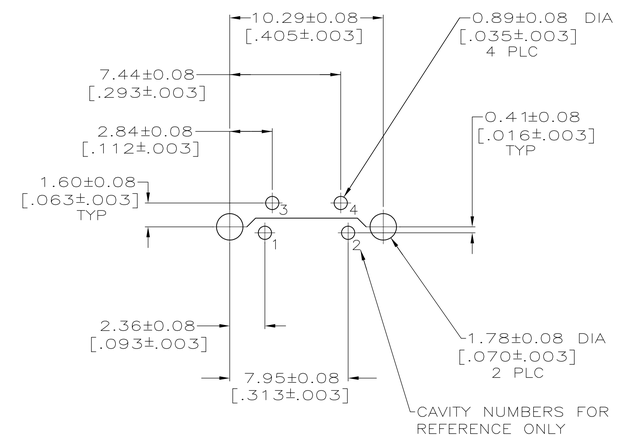

RECOMMENDED PC BOARD LAYOUT
BOTTOM VIEW

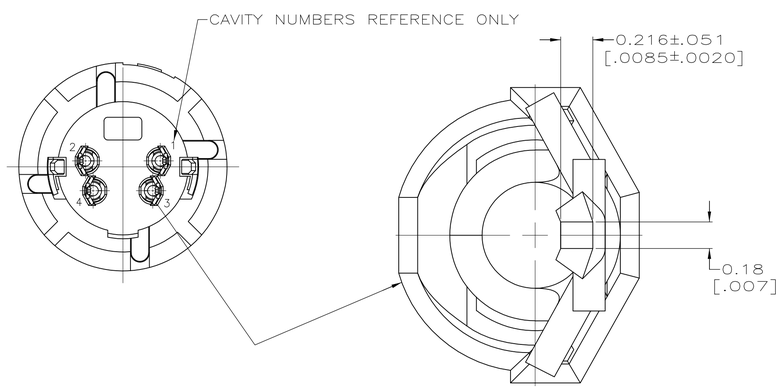

4 PLC
SCALE 50:1

	INNER SHELL FINISH	CONTACT FINISH	PART NO
OBSOLETE 8	7	2 5	~~750315-4~~
	7	3 5	~~750315-3~~
	4 5	2 5	750315-2
	4 5	3 5	750315-1

DO NOT SCALE PRINT.
UNLESS SPECIFIED
DIMENSIONS IN mm [INCHES]
TOLERANCES ON :
2 PLC DEC ± 0.13[.005]
3 PLC DEC ± -
ANGLES ± -

MATERIAL 1

FINISH SEE TABLE

DR 8-6-90 R.SHIREY
CHK -
APPD -
APPD -
PRODUCT SPEC -
APPLICATION SPEC -
WEIGHT -

AMP Incorporated
Harrisburg, PA 17105-3608

NAME
RECEPTACLE ASSEMBLY, 4 POSN, LOW FLANGE, UNSHIELDED, VERTICAL, MINIATURE CIRCULAR DIN

SIZE D | CAGE CODE 00779 | DRAWING NO 750315
SCALE 5:1 | SHEET 1 OF 1

METRIC

CUSTOMER DRAWING

Mouser Electronics

Authorized Distributor

Click to View Pricing, Inventory, Delivery & Lifecycle Information:

TE Connectivity:

750315-1