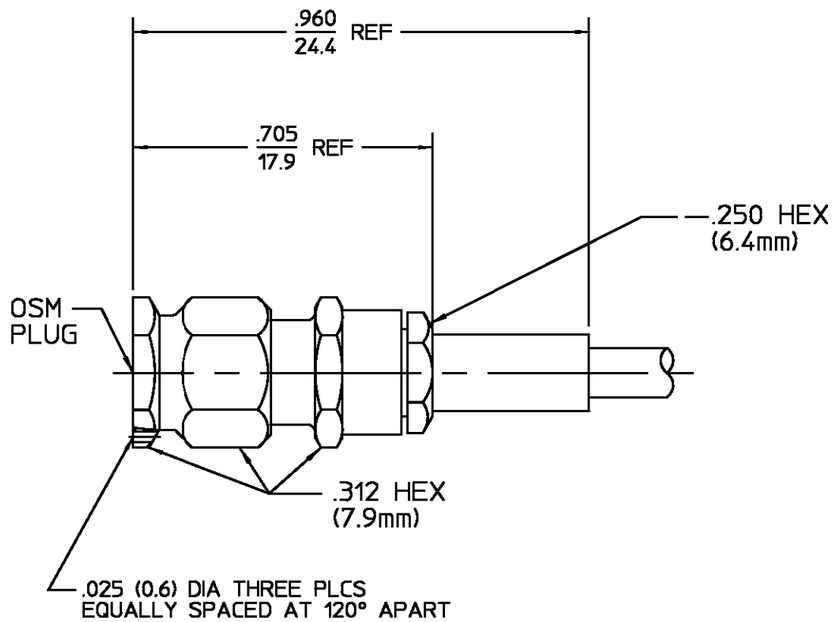

DESIGNED FOR USE WITH RG188U CABLE	
CABLE ENTRY DIAMETER MINIMUM	
CONTACT	.021
SLEEVE	.128
CLAMP NUT	.179

REVISIONS

REV	DESCRIPTION	DATE	APPROVED
01_0	RELEASED	7/6/94	

COMPONENT	MATERIAL	FINISH
HOUSING COUPLING NUT CLAMP NUT SLEEVE	STAINLESS STEEL PER ASTM-A484 AND ASTM-A582, TYPE 303	PASSIVATE PER ASTM-A-380
DIELECTRIC	TFE FLUOROCARBON PER ASTM-D-1457	N/A
REAR DIELECTRIC	NYLON OR ZYTEL #101 PER MIL-M-20693A	N/A
CENTER CONTACT	BERYLLIUM COPPER PER ASTM B 196, ALLOY C17300, CONDITION H	GOLD PLATE PER MIL-G-45204
RETAINING RING	BERYLLIUM COPPER PER ASTM B 194, ALLOY C17200, CONDITION H	N/A
GASKET	SILICONE RUBBER PER ZZ-R-765	N/A
FERRULE	COPPER OR BRASS ALLOY ROCKWELL F65 MAXIMUM	GOLD PLATE PER MIL-G-45204

ELECTRICAL	MECHANICAL	ENVIRONMENTAL
Nominal Impedance (Ohms) 50	Interface Dimensions MIL-STD-348A, Fig. 310.1	Temperature Rating -65°C To +165°C
Frequency Range (GHz) DC to 12.4	Recommended Mating Torque 7-10 IN-LB	Vibration MIL-STD-202, Method 204, Condition D
Volt Rating (VRMS MAX) @ Sea Level 250	Mating Characteristics:	Shock MIL-STD-202, Method 213, Condition I
VSWR 1.15+.02 f(GHz)	Insertion (MAX Lbs) N/A	Thermal Shock MIL-STD-202, Method 107, Condition B,
Insertion Loss (dB MAX) $.06\sqrt{f(GHz)}$	Withdrawal (MIN Oz) N/A	Moisture Resistance MIL-STD-202, Method 106,
RF Leakage (dB MIN) -60	Force to Engage and Disengage (In-Lbs MAX) 2	Corrosion - MIL-STD-202, Method 101, Condition B, 5% salt spray
Corona, 70,000 Ft (VRMS MIN) 190	Center Contact Captivation Axial (Lbs) 6.0	
Dielectric Withstanding Voltage (VRMS MIN) @ Sea Level 750	Radial (In-Oz) N/A	
Contact Resistance (Milliohms MAX) Center Contact 3.0	Cable Retention Axial Force (Lbs) 20 MIN	
Outer Contact 2.0	Torque (In-Oz) N/A	
Cable to Housing 0.5	Weight (Grams) TBD	
RF High Potential @ Sea Level (VRMS MIN @ 5 MHz) 500		
I.R.(Megohms MIN) 5,000		

.XXX = in
XX.X = mm

UNLESS OTHERWISE SPECIFIED DIMENSIONS ARE IN INCHES TOLERANCE ON

FRAC.	DEC.	ANGLES
± 1/64	±.005	± 1°

DRAWN BY — DATE 7/5/94
CHECKED BY
APP'D BY — 7/6/94

AMP

AMP Incorporated
140 Fourth Avenue
Waltham, MA 02451-7599

These drawings and specifications are the property of Omni Spectra Incorporated and shall not be reproduced or copied or used in whole or in part as the basis for the manufacture or sale of item(s) without written permission.

USE ASS'Y PROCEDURE

NO. A.P. 408-04933 (20-517)

TITLE OSM STRAIGHT CABLE PLUG-CRIMP ATTACHMENT M39012/55-3026 CAT. C

SIZE	CODE IDENT NO.		REV
B	26805	2031-8026-92	01_0
SCALE 3:1			SHEET 1 OF 1

CUSTOMER DRAWING

AMP PART # 1051782-1
SHEET 1 OF 1 REV A

Mouser Electronics

Authorized Distributor

Click to View Pricing, Inventory, Delivery & Lifecycle Information:

TE Connectivity:
2031-8026-92