Part Number: 0638121300
Status: Active
Description: Insertion Tool for CTX280 Seal Plugs

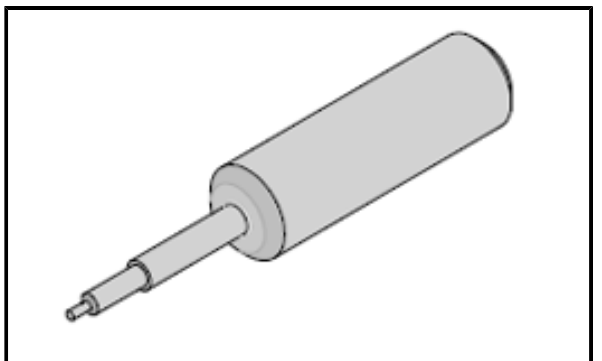
Series image - Reference only

Documents:
RoHS Certificate of Compliance (PDF)

General

Product Family	Application Tooling
Series	207121
Comments	See Tooling Specification (PDF) Above
Function	Insertion
Geographic Area	Global
Level of Automation	Manual
More Detailed Tech Information	applicationtooling@molex.com
Product Name	CTX
Tool Type	Insertion Hand Tool
UPC	887191214061
Warranty Disclaimer	CAUTION: Molex tooling crimp specifications are valid only when used with Molex terminals and tooling manufactured by Molex and sold by Molex or authorized distributors ("Molex Tooling"). When using tooling other than Molex Tooling with Molex specific connector systems listed in our ATS documents, the Molex tooling qualification does not apply and the responsibility for full qualification of the connector system is that of the customer. Molex accepts no liability for connector performance or tooling support where tooling other than Molex Tooling is used or where Molex Tooling is modified.

Material Info

Reference - Drawing Numbers

Application Tooling Documents	ATS-638121300

EU ELV
Not Relevant

EU RoHS **China RoHS**
Compliant
REACH SVHC
Not Reviewed
Halogen-Free Status
Not Relevant
Need more information on product environmental compliance?

Email productcompliance@molex.com
Please visit the Contact Us section for any non-product compliance questions.

China ROHS	Not Relevant
ELV	Not Relevant
RoHS Phthalates	Not Reviewed

Search Parts in this Series
207121 Series

Use With
34853 , 34854 CTX150 Seal Plug for CMX 70 or 120 or EURO6 Way Receptacle Connectors

Mouser Electronics

Authorized Distributor

Click to View Pricing, Inventory, Delivery & Lifecycle Information:

Molex:
63812-1300