THIS DRAWING IS UNPUBLISHED. RELEASED FOR PUBLICATION
© COPYRIGHT BY TYCO ELECTRONICS CORPORATION, ALL RIGHTS RESERVED.

LOC	DIST
DS	

REVISIONS

P	LTR	DESCRIPTION	DATE	DWN	APVD
	C	REDRAWN WITH CHANGE(FC00-0041-04)	16.MAR'04	JG	CS
	C1	REVISED(ECR-17-010262)	14.JUL'17	SH	KT

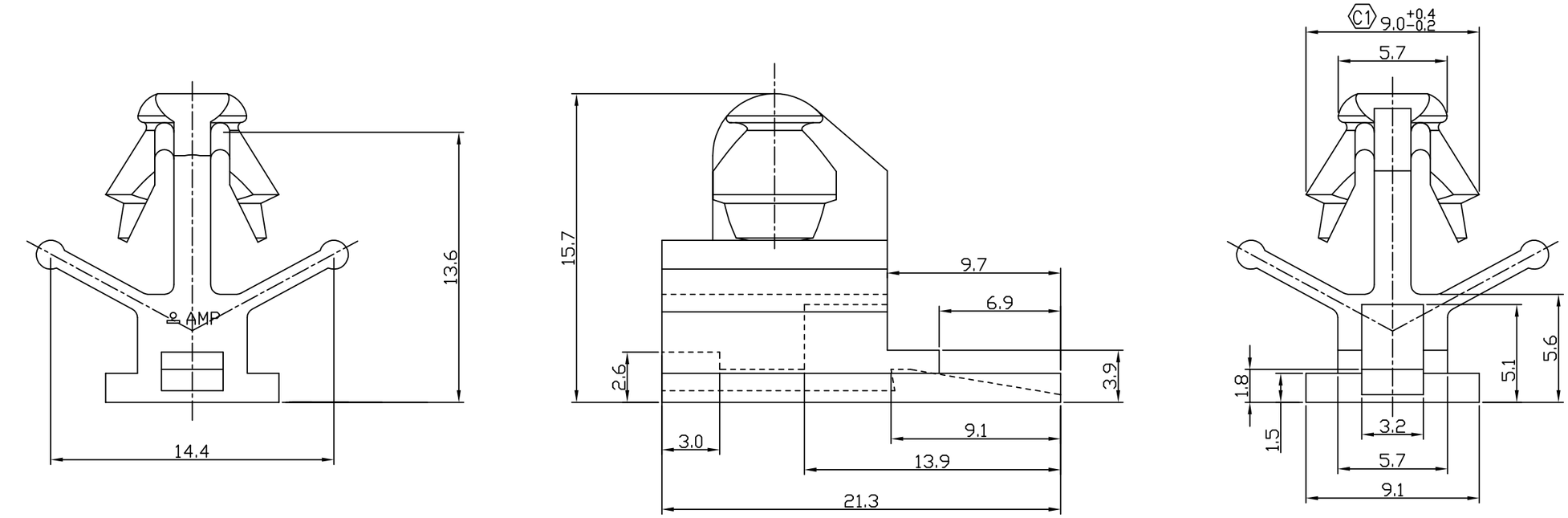

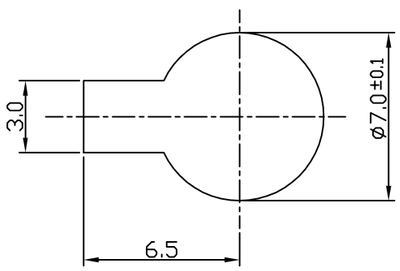

2 PANEL HOLE SIZE
THICKNESS=2.5MM

NOTE
1. APPLICABLE HSG P/N : 176143
2 MOUNTING PANEL HOLE

PART NO.	DESCRIPTION	MATERIAL	COLOR
0-85003-2	187 CLIP HSG	PA66	BLACK
0-85003-1	187 CLIP HSG	PA66	NATURAL

THIS DRAWING IS A CONTROLLED DOCUMENT FOR TYCO ELECTRONICS CORPORATION IT IS SUBJECT TO CHANGE AND THE CONTROLLING ENGINEERING ORGANIZATION SHOULD BE CONTACTED FOR THE LATEST REVISION.

DIMENSIONS: mm

3rd ANGLE PROJECTION

TOLERANCES UNLESS OTHERWISE SPECIFIED:
0 <XX<10 ± 0.2
10<XX<30 ± 0.25
30<XX ± 0.3
ANGLES ± 3°

MATERIAL

FINISH

DWN : JG MOON
CHK : BM JANG
APVD: CS LEE
PRODUCT SPEC
APPLICATION SPEC
WEIGHT 1.04g

TE Connectivity

NAME
CLIP HOUSING
FOR 187 SEALED CONN'

SIZE	CAGE CODE	DRAWING NO	RESTRICTED TO
A3	00779	C- 85003	

SCALE	SHEET	REV
4/1	1 OF 1	C1

AMP 1470-19 REV 31MAR2000

Mouser Electronics

Authorized Distributor

Click to View Pricing, Inventory, Delivery & Lifecycle Information:

TE Connectivity:
85003-2