THIS DRAWING IS UNPUBLISHED. RELEASED FOR PUBLICATION -,- .
© COPYRIGHT - By - ALL RIGHTS RESERVED.

LOC	DIST
FT	0

REVISIONS

P	LTR	DESCRIPTION	DATE	DWN	APVD
	T1	REVISED PER ECO-14-001124	24JAN2014	NK	MZ

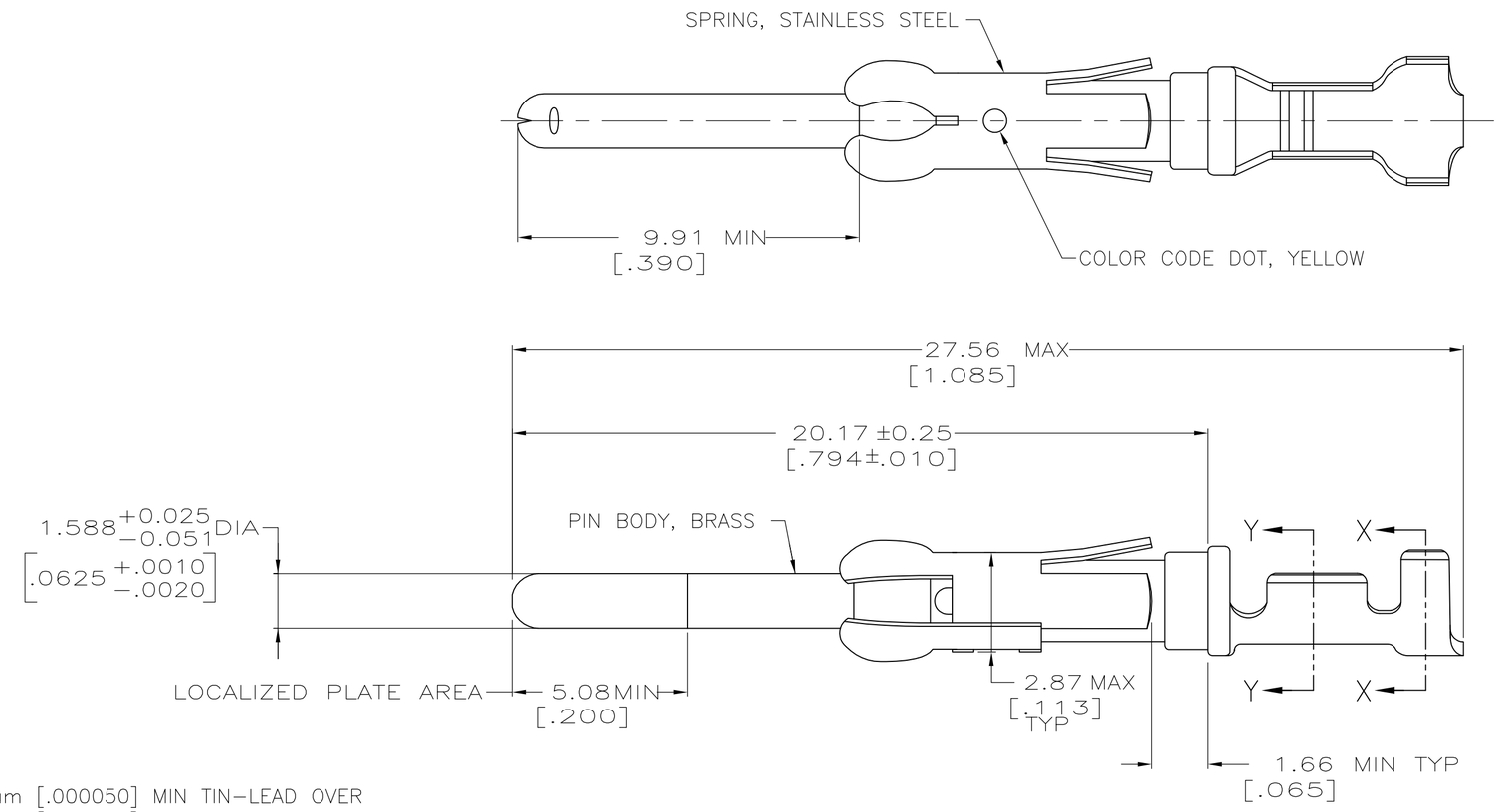

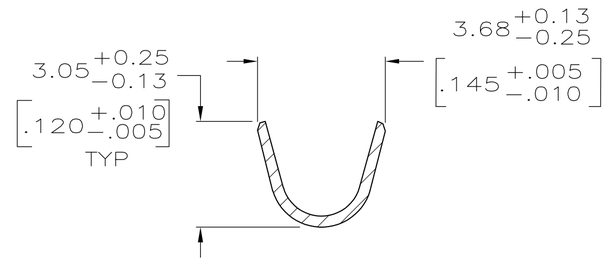

SECTION X—X

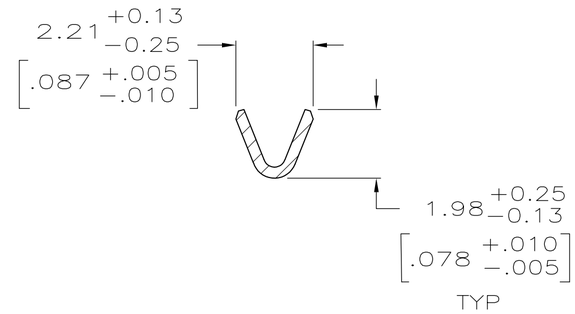

SECTION Y—Y

1. 1.27µm [.000050] MIN TIN-LEAD OVER 1.27µm [.000050] MIN NICKEL.

2. 0.76µm [.000030] MIN PRECIOUS METAL PLATE ON MATING END FOR A LENGTH OF 5.08 [.200] MIN WITH A UNIFORM GRADIENT TO 0.25µm [.000010] ON REMAINDER, OVER 1.27µm [.000050] MIN NICKEL PLATE. GOLD FLASH ALL OVER. CONFORMS TO THE REQUIREMENTS OF TE CONNECTIVITY PRODUCT SPEC 108-10042, BASED ON EIA/ECA-364-1000.01A (CONTROLLED ENVIRONMENT APPLICATIONS).

3. 0.76µm [.000030] MIN PRECIOUS METAL PLATE ON MATING END FOR A LENGTH OF 5.08 [.200] MIN WITH 1.27µm [.000050] MIN MATTE TIN PLATE IN WIRE CRIMP AREA BOTH OVER 1.27µm [.000050] MIN NICKEL PLATE. CONFORMS TO THE REQUIREMENTS OF TE CONNECTIVITY PRODUCT SPEC 108-10042, BASED ON EIA/ECA-364-1000.01A (CONTROLLED ENVIRONMENT APPLICATIONS).

4. 0.38µm [.000015] MIN GOLD IN LOCALIZED PLATE AREA, 1.27µm [.000050] MIN MATTE TIN PLATE IN WIRE CRIMP AREA, BOTH ALL OVER 1.27µm [.000050] NICKEL.

5. WIRE RANGE 24-20 AWG.

6. INSULATION RANGE 2.03[.080]-2.54[.100] DIA.

7. 0.38µm [.000015] MIN GOLD PER MIL-G-45204 ON LOCALIZED GOLD PLATE AREA, 1.27µm [.000050] MIN TIN-LEAD PER MIL-T-10727 FOR A LENGTH OF 5.69 [.224] MIN ON OPPOSITE END, BOTH OVER 1.27µm [.000050] MIN NICKEL PER QQ-N-290 ON ENTIRE CONTACT.

8. 1.27µm [.000050] MIN TIN OVER 1.27µm [.000050] MIN NICKEL.

9. OBSOLETE PARTS: OBSOLETE CIS STREAMLINING PER D.RENAUD/D.SINISI.

	PACKAGING TYPE	FINISH	STRIP P/N REF	PART NO
	SMALL PACK	8	1-66332-4 OR 1-66332-5	1-66400-1
	STANDARD	8	1-66332-4 OR 1-66332-5	1-66400-0
	SMALL PACK	3	66332-4	66400-9
9 OBSOLETE	~~SMALL PACK~~	~~4~~	~~66332-3~~	~~66400-8~~
9 OBSOLETE	~~SMALL PACK~~	~~2~~	~~66332-6~~	~~66400-7~~
	SMALL PACK	1	66332-1	66400-6
OBSOLETE	~~STANDARD~~	~~7~~	~~1-66332-2~~	~~66400-5~~
	STANDARD	3	66332-4	66400-4
	STANDARD	4	66332-3	66400-3
	STANDARD	2	66332-6	66400-2
	STANDARD	1	66332-1	66400-1

THIS DRAWING IS A CONTROLLED DOCUMENT.

DIMENSIONS: mm [INCHES]

TOLERANCES UNLESS OTHERWISE SPECIFIED:
0 PLC ± -
1 PLC ± -
2 PLC ± 0.13[.005]
3 PLC ± -
4 PLC ± -
ANGLES ± -

MATERIAL: SEE CALL OUT
FINISH: PIN BODY: SEE TABLE

DWN H MOLL 9-27-90
CHK J.MCCLINTON 12-15-90
APVD A.BOULLIANNE 12-10-90
PRODUCT SPEC —
APPLICATION SPEC —
WEIGHT —

TE Connectivity

NAME: PIN ASSEMBLY, LOOSE PIECE, TYPE III+

SIZE	CAGE CODE	DRAWING NO	RESTRICTED TO
A2	00779	C-66400	—

CUSTOMER DRAWING | SCALE 8:1 | SHEET 1 OF 1 | REV T1

66400

1471-9 (3/11)

Mouser Electronics

Authorized Distributor

Click to View Pricing, Inventory, Delivery & Lifecycle Information:

TE Connectivity:

66400-6