THIS DRAWING IS UNPUBLISHED. RELEASED FOR PUBLICATION 20
© COPYRIGHT 20 BY - ALL RIGHTS RESERVED.

REVISIONS

P	LTR	DESCRIPTION	DATE	DWN	APVD
	H6	REVISED PER ECO-11-018497	09SEP2011	DLD	DCM
	H7	REVISED PER ECO-14-015177	15OCT2014	DLD	DCM
	H8	REVISED PER ECO-15-011500	07AUG2015	DLD	DCM

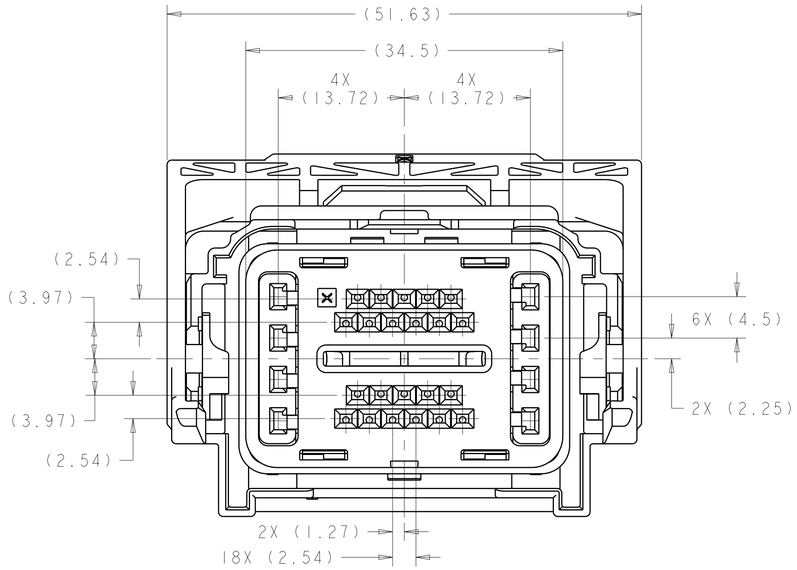

KEYING OPTION "A" 3
1438083-1

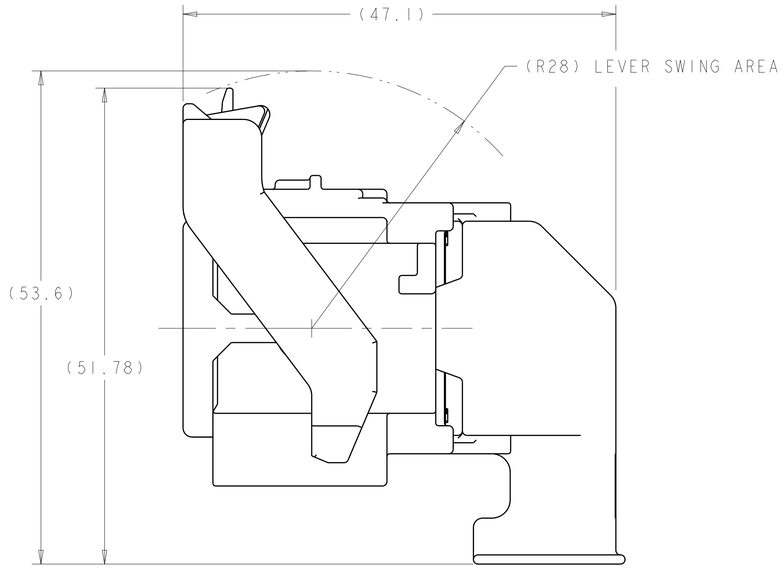

SHOWN WITH CAM LEVER AND SPACER
IN LOADED POSITION WITH
OPTIONAL WIRESHIELD

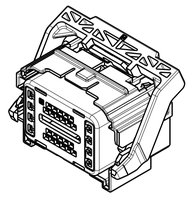

SCALE 1:1

1. MATERIAL:
   HARNESS - 35% GLASS FILLED PA66, BLACK
   ALT MAT'L - 30% GLASS FILLED sPS, BLACK

   SPACER - 40% GLASS FILLED PPS, RED
   ALT MAT'L - 30% GLASS FILLED sPS, RED

   COVER - 35% GLASS FILLED PA66, BLACK
   ALT MAT'L - 30% GLASS FILLED LCP, BLACK

   CAM LEVER - 35% GLASS FILLED NYLON, GRAY
   GROMMET - SILICONE, BROWN
   PERIMETER SEAL - SILICONE, GREEN

2. CAM LEVER AND SPACER ARE SHIPPED IN PRE-LATCH POSITION.

3. SEE PINOUT CHART FOR CLOSED CIRCUIT CONFIGURATIONS.

4. CAVITIES WITH A NUMERIC SYMBOL INDICATES CLOSED TERMINAL LOCATIONS.
   BLANK CAVITIES INDICATE OPEN TERMINAL HOLE LOCATIONS.

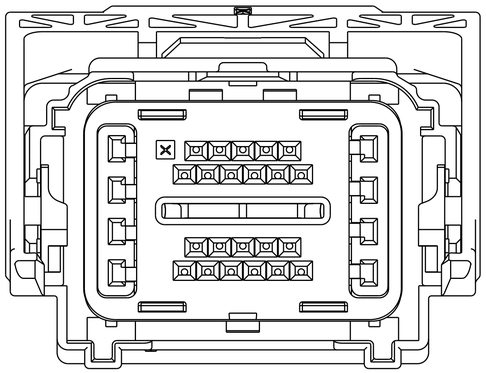

KEYING OPTION "B" 3
2272926-1

CHART FOR CLOSED CIRCUIT CONFIGURATIONS
SHEET 2

THIS DRAWING IS A CONTROLLED DOCUMENT.		DWN R. VESTAL 15OCT2003	TE Connectivity
DIMENSIONS: mm	TOLERANCES UNLESS OTHERWISE SPECIFIED: 0 PLC ±- 1 PLC ±0.3 2 PLC ±0.10 3 PLC ±- 4 PLC ±- ANGLES ±1°	CHK D. STRAUSSER 15OCT2003	NAME PCM HARNESS ASSEMBLY, 30-WAY CONNECTOR
		APVD D. STRAUSSER 15OCT2003	
		PRODUCT SPEC -	
		APPLICATION SPEC -	SIZE A1 / CAGE CODE 00779 / DRAWING NO C-1438083 / RESTRICTED TO -
MATERIAL - - 1	FINISH - -	WEIGHT -	
		CUSTOMER DRAWING	SCALE 3:1 / SHEET 1 OF 2 / REV H8

THIS DRAWING IS UNPUBLISHED. RELEASED FOR PUBLICATION 20
© COPYRIGHT 20 BY - ALL RIGHTS RESERVED.

REVISIONS

P	LTR	DESCRIPTION	DATE	DWN	APVD
	-	SEE SHEET 1	-	-	-

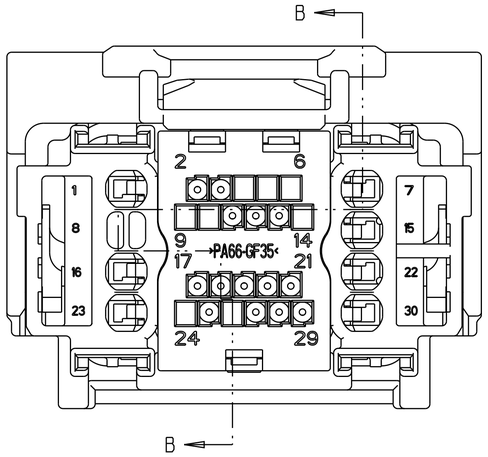

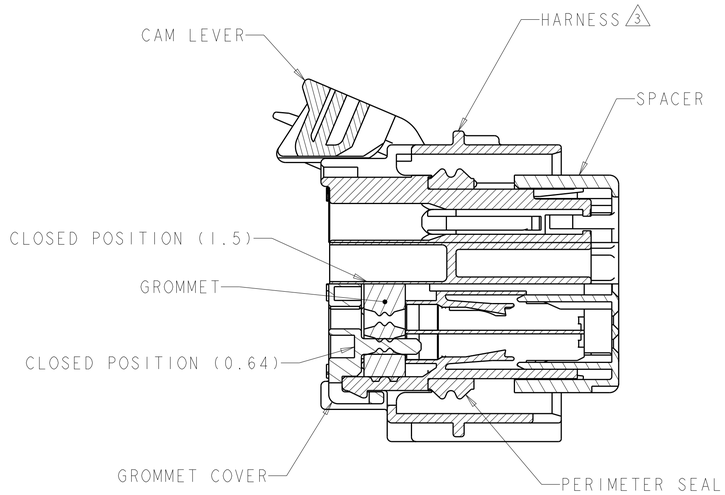

SECTION B-B

30	29	28	27	26	25	24	23	22	21	20	19	18	17	16	15	14	13	12	11	10	9	8	7	6	5	4	3	2	1	PART NUMBER	FORD PART NUMBER

Mouser Electronics

Authorized Distributor

Click to View Pricing, Inventory, Delivery & Lifecycle Information:

TE Connectivity:

1-1438083-3