Part Number: 1060520040
Status: Active
Overview: LC Connectors, Adapters and Cable Assemblies
Description: LC Loopback, Multimode, 62.5/125µm fiber

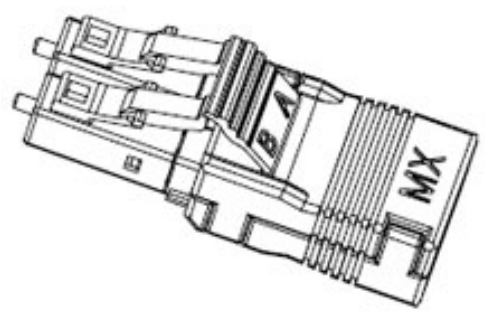

Series image - Reference only

Documents:
Drawing (PDF)
RoHS Certificate of Compliance (PDF)

General	
Product Family	Fiber Optic Assemblies
Series	106052
Boot Type	N/A
Comments	One Piece, One Piece
Connector to Connector	LC-to-LC
Mode	Multimode
Overview	LC Connectors, Adapters and Cable Assemblies
Product Name	LC
UPC	822350267175
Physical	
Cable Length	LOOPBACK
Cable Size	250µm
Fiber (Core/Cladding)	62.5/125µm
Net Weight	2.422/g
Single Ended	No
Wire/Cable Type	Simplex
Solder Process Data	
Lead-freeProcess Capability	N/A
Material Info	
Engineering Number	860520040
Reference - Drawing Numbers	
Sales Drawing	SD-106052-0040

EU ELV
Not Relevant

EU RoHS
Compliant

China RoHS

REACH SVHC
Not Contained Per - ED/71/2019 (16 July 2019)

Halogen-Free Status
Not Low-Halogen

For more information, please visit Contact US

China ROHS	Green Image
ELV	Not Relevant
RoHS Phthalates	Not Contained

Search Parts in this Series
106052 Series

Mouser Electronics

Authorized Distributor

Click to View Pricing, Inventory, Delivery & Lifecycle Information:

Molex:
106052-0040