Part Number: 0003091062
Status: Active
Overview: Standard .093" Pin and Socket Connectors
Description: 2.36mm Diameter Standard .093" Pin and Socket Receptacle Housing, 6 Circuits, Dual Row, Natural

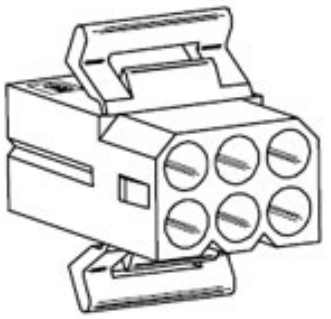

Series image - Reference only

Documents:
3D Model
Drawing (PDF)
Product Specification PS-02-09 (PDF)
Product Specification PS-42477-001 (PDF)
Product Specification PS-43660-9999-001 (PDF)
Packaging Specification PK-1261-001-001 (PDF)
RoHS Certificate of Compliance (PDF)

Agency Certification

CSA	LR19980
UL	E29179

General

Product Family	Crimp Housings
Series	1261
Application	Power, Wire-to-Wire
Comments	Same as part no. 03091061 except without locking ramp
Overview	Standard .093" Pin and Socket Connectors
Product Name	Standard .093"
UPC	800754232029

Physical

Circuits (maximum)	6
Color - Resin	Natural
Flammability	94V-2
Gender	Receptacle
Glow-Wire Capable	No
Material - Resin	Nylon
Net Weight	3.130/g
Number of Rows	2
Packaging Type	Bag
Panel Mount	Yes
Pitch - Mating Interface	5.03mm
Stackable	No
Temperature Range - Operating	-40° to +105°C

Electrical

Current - Maximum per Contact	11.0A

Solder Process Data

Lead-freeProcess Capability	N/A

Material Info

Engineering Number	1261-R1

Reference - Drawing Numbers

Packaging Specification	PK-1261-001-001
Product Specification	PS-02-09, PS-42477-001, PS-43660-9999-001
Sales Drawing	12610000-SD-000

EU ELV
Not Relevant

EU RoHS
Compliant

China RoHS

REACH SVHC
Not Contained Per - ED/61/2018 (27 June 2018)

Halogen-Free Status
Low-Halogen

For more information, please visit Contact US

China ROHS	Green Image
ELV	Not Relevant
RoHS Phthalates	Not Contained

Search Parts in this Series
1261 Series

Mates With
03-09-2062 , 03-09-7062 , 3099

Use With
1189 Crimp Terminals, 1190 Crimp Terminals, 1376 Male PC Tail Terminals, 1377 Female PC Tail Terminals, 1380 Male Crimp Terminals, 1381 Female Crimp Terminals, 1433 Crimp Terminals, 1434 Male Crimp Terminals, 1973

Mouser Electronics

Authorized Distributor

Click to View Pricing, Inventory, Delivery & Lifecycle Information:

Molex:
03-09-1062