THIS DRAWING IS UNPUBLISHED. RELEASED FOR PUBLICATION 20
© COPYRIGHT 20 BY TYCO ELECTRONICS CORPORATION. ALL RIGHTS RESERVED.

PART NUMBER	REV	TERMINATOR	FEED TYPE	DESCRIPTION
1530115-1	A	LEADMAKER	MECH POST FEED	CUTS CARRIER
1530115-2	A	BENCH	MECH PRE FEED	CUTS CARRIER
1530115-6	A	LEADMAKER	MECH POST FEED	CONTINUOUS CARRIER
7-1530115-1	A	LEADMAKER	MECH POST FEED	-1 AND SPARE PARTS
7-1530115-2	A	BENCH	MECH PRE FEED	-2 AND SPARE PARTS
7-1530115-6	A	LEADMAKER	MECH POST FEED	-6 AND SPARE PARTS
7-1530115-7	A	-	-	SPARE PARTS KIT

SET UP GAGE 458637-3

LOC	DIST
A	66

REVISIONS

P	LTR	DESCRIPTION	DATE	DWN	APVD
	A	RELEASED	18MAY2009	BH	BH

CRIMP DATA MOLEX TERMINAL FORD CRIMP SPECS

TERMINAL NAME: TERMINAL, WIRE SNAP-ON FEMALE

CRIMP	SIZE	TYPE	RANGE
WIRE	2.01 [.079 IN]	F	0.50-0.85mm² or 20-18 AWG
INSUL	2.29 [.090 IN]	F	Ø2.4mm MAX

WIRE STRIP LENGTH 2.00-3.00 [.078-.118 IN]

APPL INSTRUCTIONS 408-8322

TERMINAL APPL SPEC	FORD	-	FEED
	-	-	19.14 [.754 IN]

TERMINALS APPLIED

TE PN	FORD PN	-	-
1949943-1	E7EB-14474-CA	-	-
-	-	-	-
-	-	-	-
-	-	-	-

WIRE SIZE	CRIMP HEIGHT	PIN PN & LENGTH [IN]
0.82mm² (18AWG)	1.30 ±0.05 [.051 ±.002 IN]	2-354779-2 [.3100]
0.51mm² (20AWG)	1.20 ±0.05 [.047 ±.002 IN]	2-354779-9 [.3135]
-	-	
-	-	
-	-	
-	-	
-	-	
-	-	
-	-	
-	-	
-	-	
-	-	

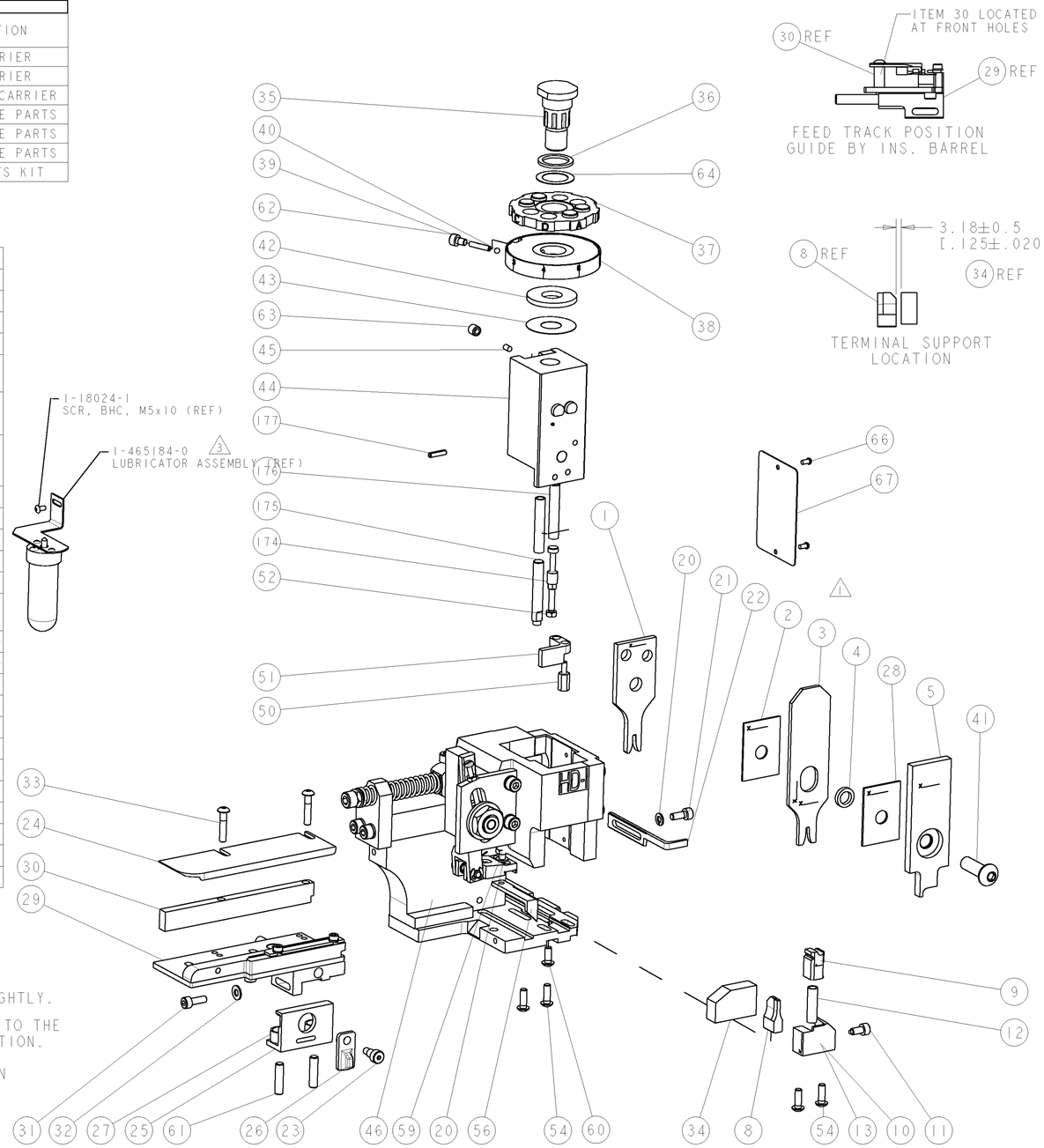

1. RECOMMENDED SPARE PARTS.
2. GREASE RAM, CAM, CAM FOLLOWER AND FEED ROD LIGHTLY.
3. CERTAIN TERMINALS REQUIRE LUBRICATION. REFER TO THE APPLICATOR INSTRUCTION SHEET FOR MORE INFORMATION.
4. LUBRICATE DAILY PER THE APPLICATOR INSTRUCTION SHEET SUPPLIED WITH THE APPLICATOR.

-	1	1	1	1	1	1	993111-8	PIN, SLOTTED SPRING 3.0 X 12.0	177
-	2	2	2	2	2	2	3-22280-7	SPRING, COMPRESSION	176
-	1	1	1	1	1	1	1752353-1	GUIDE PIN,HOLDDOWN	175
-	1	1	1	1	1	1	1901680-1	GUIDE PIN,HOLDDOWN	174
-	1	1	1	1	1	1	1338705-1	DOCUMENTATION PACKAGE	71
-	1	1	1	1	1	1	461264-1	PLATE, IDENTIFICATION	67
-	2	2	2	2	2	2	21017-2	SCREW, DRIVE	66
-	1	1	1	1	1	1	986950-1	WASHER, FLAT PRECISION	64
-	1	1	1	1	1	1	3-18031-0	SCR, SET, CUP POINT M6 X 6.0	63
-	1	1	1	1	1	1	18023-9	SCR, SKT HD CAP M4 X 6.0	62
-	2	2	2	2	2	2	2-18032-5	SCR, SET, FLT POINT M5 X 20.0	61
-	1	1	1	1	1	1	18024-7	SCR, BTN SKT HD CAP (M4 X 10.0)	60
-	1	1	1	1	1	1	5-18022-2	SCR, HEX HD CAP M4 X 8.0	59
-	1	1	1	1	1	1	1338685-1	PAWL, FEED	56
-	4	4	4	4	4	4	18024-8	SCR, BTN SKT HD CAP (M4 X 12.0)	54
-	1	1	1	1	1	1	1-18030-0	NUT, HEX, REG M3.5	52
-	1	1	1	1	1	1	1901681-1	HOLDDOWN, TERMINAL	51
-	1	1	1	1	1	1	2-1752354-7	STANDOFF,HOLD-DOWN	50
-	1	1	1	1	1	1	18024-3	SCR, BTN SKT HD CAP (M3 X 10.0)	49
-	-	1	-	-	1	-	1338675-1	CAM, UNIVERSAL PRE FEED	48
-	1	-	1	1	-	1	1338676-1	CAM, UNIVERSAL POST-FEED	47
-	1	1	1	1	1	1	1320999-3	APPLICATOR SUBASSEMBLY, HDI	46
-	1	1	1	1	1	1	690191-1	PLUG,NYLON	45
-	1	1	1	1	1	1	1633724-1	RAM, (SIDE FEED)	44
-	1	1	1	1	1	1	690125-1	SHIM SUB-ASSY	43
-	1	1	1	1	1	1	690124-1	WASHER, RAM (.115)	42
-	1	1	1	1	1	1	2-18024-6	SCR, BTN SKT HD CAP (M8 X 25.0)	41
-	1	1	1	1	1	1	23241-1	BALL, STEEL	40
-	1	1	1	1	1	1	2-22278-7	SPRING, COMPRESSION	39
-	1	1	1	1	1	1	1320922-1	DISC, ADJUST, INSULATION CRIMP	38
-	1	1	1	1	1	1	354777-1	WIRE DISC, ASSEMBLY	37
-	1	1	1	1	1	1	22480-5	SPRING, COMPRESSION	36
-	1	1	1	1	1	1	690212-1	POST, RAM	35
-	1	1	1	1	1	1	1752356-1	SUPPORT, TERMINAL	34
-	2	2	2	2	2	2	1-18024-0	SCR, BTN SKT HD CAP (M4 X 20.0)	33
-	1	1	1	1	1	1	18027-2	WASHER, FLAT, REG M4	32
-	1	1	1	1	1	1	1-18023-2	SCR, SKT HD CAP M4 X 12.0	31
-	1	1	1	1	1	1	1320908-1	SPACER, STRIP GUIDE	30
-	1	1	1	1	1	1	1633073-1	STRIP GUIDE ASSEMBLY	29
-	1	1	1	1	1	1	1-455888-0	SPACER, CRIMPER	28
-	2	2	2	2	2	2	1-22284-0	SPRING, COMPRESSION	27
-	1	1	1	1	1	1	356835-1	LEVER, DRAG RELEASE	26
-	1	1	1	1	1	1	240792-1	DRAG, TERMINAL	25
-	1	1	1	1	1	1	1320928-1	PLATE, STRIP GUIDE	24
-	1	1	1	1	1	1	980371-4	SCR, SKT HD SHLDR 5.0 DIA X 6.0	23
-	1	-	1	1	-	1	690472-2	STRIPPER	22
-	1	1	1	1	1	1	1-18023-1	SCR, SKT HD CAP M4 X 10.0	21
-	2	2	2	2	2	2	18025-2	WASHER, SPRG LOCK, REG M4	20
-	-	1	-	-	1	-	690472-1	STRIPPER	19
1	1	1	1	1	1	1	1338684-1	SHEAR HOLDER, FRONT	13
-	-	-	-	-	-	-	-	-	13
-	1	1	1	1	1	1	3-22280-3	SPRING, COMPRESSION	12
-	1	1	1	1	1	1	356885-4	STOP, SHEAR	11
1	-	1	1	-	1	1	1320921-1	SHEAR HOLDER, FRONT, CUT	10
1	-	1	1	1	1	1	462006-7	FLOATING SHEAR, FRONT	9
1	2	2	2	1	1	1	1633711-6	ANVIL, COMBINATION	8
-	-	-	-	-	-	-	-	-	7
-	-	-	-	-	-	-	-	-	6
-	1	1	1	1	1	1	2-455889-0	DEPRESSOR, SHEAR	5
-	1	1	1	1	1	1	238011-4	BLOCK, CRIMPER SPACER	4
1	2	2	2	1	1	1	683453-4	CRIMPER, INSULATION PREMIUM	3
-	1	1	1	1	1	1	455888-8	SPACER, CRIMPER	2
1	2	2	2	1	1	1	1633588-8	CRIMPER, WIRE	1
-77	-76	-72	-71	-6	-2	-1	PART NO	DESCRIPTION	ITEM NO

VIEW B ROTATED 180°

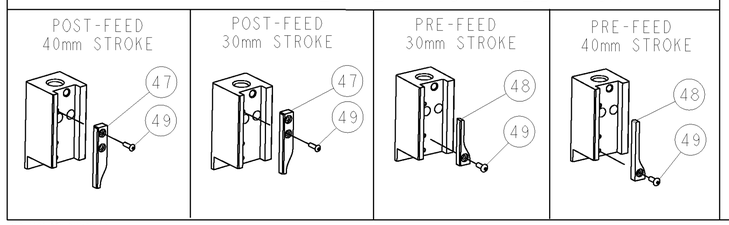

THIS DRAWING IS A CONTROLLED DOCUMENT FOR TYCO ELECTRONICS CORPORATION. IT IS SUBJECT TO CHANGE AND THE CONTROLLING ENGINEERING ORGANIZATION SHOULD BE CONTACTED FOR THE LATEST REVISION.

DIMENSIONS: mm [IN]

TOLERANCES UNLESS OTHERWISE SPECIFIED:
0 PLC ±-
1 PLC ±-
2 PLC ±-
3 PLC ±-
4 PLC ±-
ANGLES ±-

MATERIAL - -
FINISH - -

DWN	B.HIGMAN	26MAR2009
CHK	T.ELBIN	26MAR2009
APVD	N.DEMING	26MAR2009

PRODUCT SPEC -
APPLICATION SPEC See Table
WEIGHT -

Tyco Electronics
Tyco Electronics
Harrisburg, PA 17105-3608

NAME SIDE FEED HDI APPLICATOR

SIZE	CAGE CODE	DRAWING NO	RESTRICTED TO
A1	00779	C-1530115	-

CUSTOMER DRAWING SCALE 3:5 SHEET 1 OF 1 REV A

Mouser Electronics

Authorized Distributor

Click to View Pricing, Inventory, Delivery & Lifecycle Information:

TE Connectivity:

1530115-2