REVISIONS			
REV	DESCRIPTION	DATE	APPROVED
02_2	REVISED	1/28/97	1/28/97

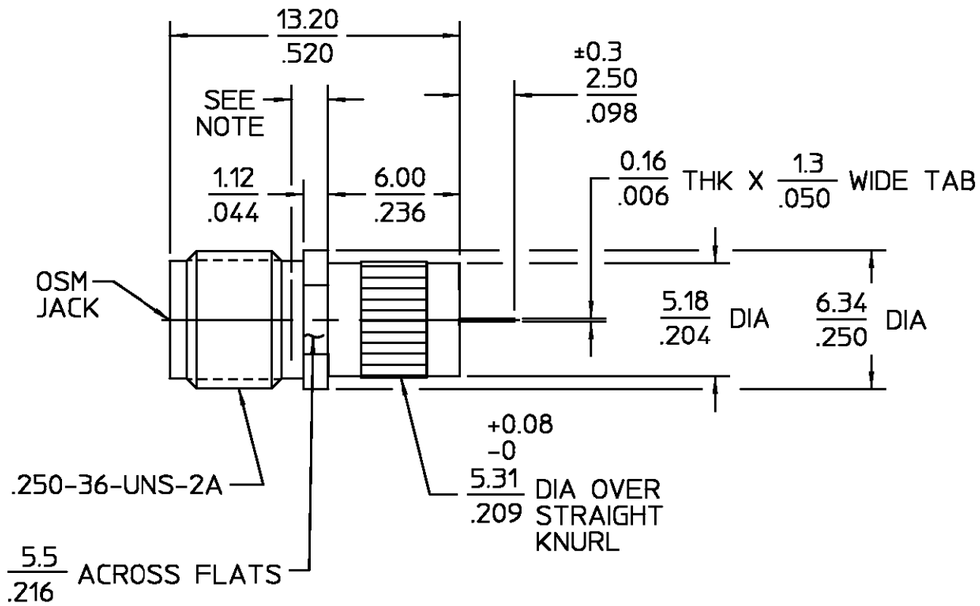

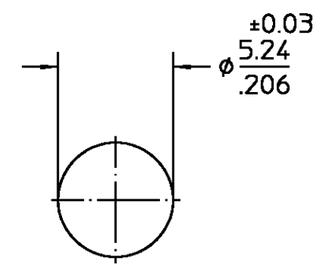

RECOMMENDED MOUNTING HOLE

ELECTRICAL	
Nominal Impedance (Ohms)	50
Frequency Range (GHz)	DC to 18 GHz
Volt Rating (VRMS MAX)	
@ Sea Level	335
VSWR	1.05 + .005 fGHz
Insertion Loss (dB MAX)	$.03\sqrt{f(GHz)}$
RF Leakage (dB MIN)	-[90-f(GHz)]
Corona, 70,000 Ft (VRMS MIN)	250
Dielectric Withstanding Voltage	
(VRMS MIN) @ Sea Level	1000
Contact Resistance (Milliohms MAX)	
Center Contact	3.0
Outer Contact	2.0
Cable to Housing	N/A
RF High Potential @ Sea Level	
(VRMS MIN @ 5 MHz)	670
I.R.(Megohms MIN)	10,000

MECHANICAL	
Interface Dimensions MIL-STD-348A,	
Fig.	310.2
Recommended Mating	
Torque	3-5 in/lbs(0.34Nm-0.57Nm)
Mating Characteristics:	
Insertion (MAX Lbs)	3.0 (1.36Kg)
Withdrawal (MIN Oz)	1.0 (28.35g)
Force to Engage and	
Disengage (In-Lbs MAX)	2(0.23Nm)
Center Contact Captivation	
Axial (Lbs)	6.0 (2.7Kg) MIN
	FROM INTERFACE
	4.0 (1.8Kg) MIN
	FROM FLANGE
Radial (In-Oz)	4.0 (0.028Nm)
Weight (Grams)	TBD

ENVIRONMENTAL
Temperature Rating -65 C° TO +125 C°
Vibration MIL-STD-202, Method 204, Condition D
Shock MIL-STD-202, Method 213, Condition I
Thermal Shock MIL-STD-202, Method 107, Condition B
Moisture Resistance MIL-STD-202, Method 106, Except Vibration Shall Be Omitted
Corrosion - MIL-STD-202, Method 101, Condition B, 5% salt spray

XX.X = mm
.XXX = in

COMPONENT	MATERIAL	FINISH
HOUSING	BRASS	WHITE BRONZE
DIELECTRIC	TFE FLUOROCARBON PER ASTM-D-1457	N/A
CENTER CONTACT	BERYLLIUM COPPER PER ASTM B 196, ALLOY C17300, CONDITION H	GOLD PLATE PER MIL-G-45204

UNLESS OTHERWISE SPECIFIED DIMENSIONS ARE IN MILLIMETERS TOLERANCE ON
DEC. ±0.13 ANGLES ± 1°

DRAWN BY DATE 12/1/95
CHECKED BY
APP'D BY 12/11/95

AMP Incorporated
140 Fourth Avenue
Waltham, MA 02451-7599

These drawings and specifications are the property of M/A-COM Interconnect Division and shall not be reproduced or copied or used in whole or in part as the basis for the manufacture or sale of item(s) without written permission.

USE ASS'Y PROCEDURE

NO. A.P. N/A

TITLE OSM PANEL MOUNT JACK RECEPTACLE STRAIGHT TERMINAL

SIZE	CODE IDENT NO.		REV
B	26805	2058-5573-36	02_2
SCALE 4:1			SHEET 1 OF 1

CUSTOMER DRAWING

AMP PART # 1311167-1
SHEET 1 OF 1 REV A

Mouser Electronics

Authorized Distributor

Click to View Pricing, Inventory, Delivery & Lifecycle Information:

TE Connectivity:

1311167-1