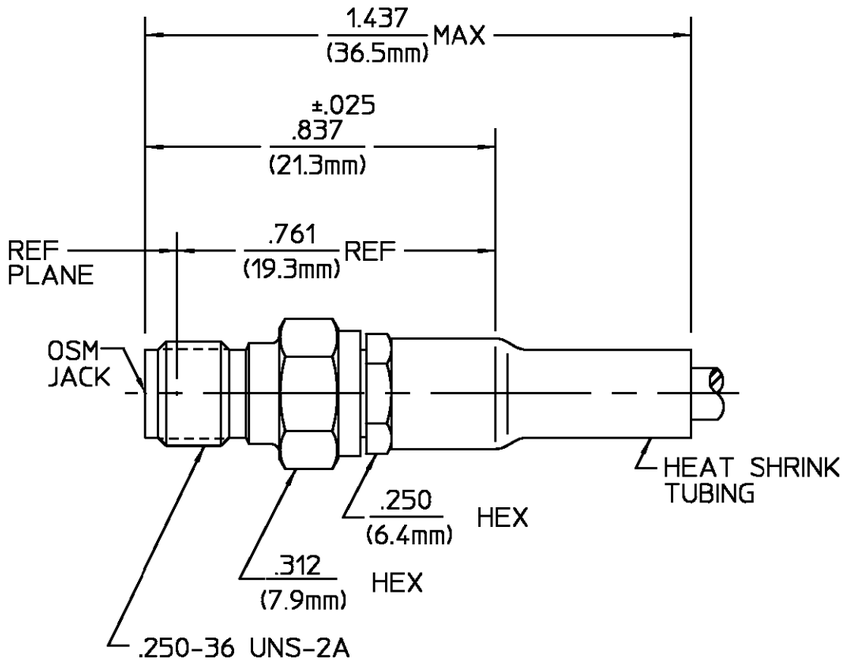

DESIGNED FOR USE WITH RG-142/U OR EQUIVALENT	
CABLE ENTRY DIAMETER MINIMUM	
FERRULE	.216
SLEEVE	.119
DIELECTRIC	.042
CONTACT	.039

REVISIONS

REV	DESCRIPTION	DATE	APPROVED
--	UPDATED		8/27/93

COMPONENT	MATERIAL	FINISH
HOUSING CLAMP NUT SLEEVE	STAINLESS STEEL PER ASTM-A484 AND ASTM-A582, TYPE 303	GOLD PLATE PER MIL-G-45204 OVER NICKEL PLATE PER QQ-N-290
DIELECTRIC	TFE FLUOROCARBON PER ASTM-D-1457	N/A
DIELECTRIC	NYLON OF ZYTEL #101 PER MIL-M-20693A, TYPE 1	N/A
CENTER CONTACT	BERYLLIUM COPPER PER ASTM B 196, ALLOY C17300, CONDITION H	GOLD PLATE PER MIL-G-45204 OVER NICKEL PLATE PER QQ-N-290
"O" - RING	SILICONE RUBBER PER ZZ-R-765	N/A
SHRINK TUBING	HEAT SHRINKABLE POLYOLEFIN COMPOUND MIL-I-23053/4	N/A
FERRULE	COPPER OR BRASS ALLOY ROCKWELL F65 MAXIMUM	GOLD PLATE PER MIL-G-45204 OVER COPPER PLATE PER MIL-C-14550

ELECTRICAL	MECHANICAL	ENVIRONMENTAL
Nominal Impedance (Ohms) 50	Interface Dimensions MIL-STD-348A, Fig. 310.2	Temperature Rating -65°C to +165°C
Frequency Range (GHz) DC to 12	Recommended Mating Torque 7-10 In-Lbs	Vibration MIL-STD-202, Method 204, Condition D.
Volt Rating (VRMS MAX) @ Sea Level 335	Mating Characteristics: Insertion (MAX Lbs) 3.0	Shock MIL-STD-202, Method 213, Condition I.
VSWR 1.15 +.01(f)GHz	Withdrawal (MIN Oz) 1.0	Thermal Shock MIL-STD-202, Method 107, Condition B, Except High Temp +85°C.
Insertion Loss (dB MAX) $.06\sqrt{f(GHz)}$	Force to Engage and Disengage (In-Lbs MAX) 2.0	Moisture Resistance MIL-STD-202, Method 106
RF Leakage (dB MIN) -[60-f(GHz)]	Center Contact Captivation Axial (Lbs) 6.0	Corrosion - MIL-STD-202, Method 101, Condition B, 5% salt spray
Corona, 70,000 Ft (VRMS MIN) 250	Radial (In-Oz) N/A	
Dielectric Withstanding Voltage (VRMS MIN) @ Sea Level 1000	Cable Retention Axial Force (Lbs MIN) 40	
Contact Resistance (Milliohms MAX) Center Contact 2.0	Torque (In-Oz) N/A	
Outer Contact 2.0	Weight (Grams) TBD	
Cable to Housing 0.5		
RF High Potential @ Sea Level (VRMS MIN @ 5 MHz) 670		
I.R.(Megohms MIN) 10,000		

UNLESS OTHERWISE SPECIFIED DIMENSIONS ARE IN INCHES
TOLERANCE ON
FRAC. ± 1/64 DEC. ±.005 ANGLES ± 1°

		DATE
DRAWN BY	RMK	4/14/69
CHECKED BY	PW	4/15/69
APP'D BY	D.NANIA	4/18/77

AMP

AMP Incorporated
140 Fourth Avenue
Waltham, MA 02451-7599

These drawings and specifications are the property of Omni Spectra Incorporated and shall not be reproduced or copied or used in whole or in part as the basis for the manufacture or sale of item(s) without written permission.

USE ASS'Y PROCEDURE

408-04810
NO. A.P. (20-055)

TITLE OSM STRAIGHT CABLE JACK CRIMP ATTACHMENT

SIZE	CODE IDENT NO.		REV
B	26805	2032-5007-00	04_2

SCALE 3 : 1 SHEET 1 OF 1

CUSTOMER DRAWING

AMP PART # 1051861-1
SHEET 1 OF 1 REV A

Mouser Electronics

Authorized Distributor

Click to View Pricing, Inventory, Delivery & Lifecycle Information:

TE Connectivity:

1051861-1