THIS DRAWING IS UNPUBLISHED. RELEASED FOR PUBLICATION -,- .
© COPYRIGHT - By - ALL RIGHTS RESERVED.

REVISIONS

P	LTR	DESCRIPTION	DATE	DWN	APVD
	Y	REVISED PER ECO-12-012320	04JUL12	KH	MZ
	Z	REVISED PER ECO-16-017885	07OCT2017	RS	MZ

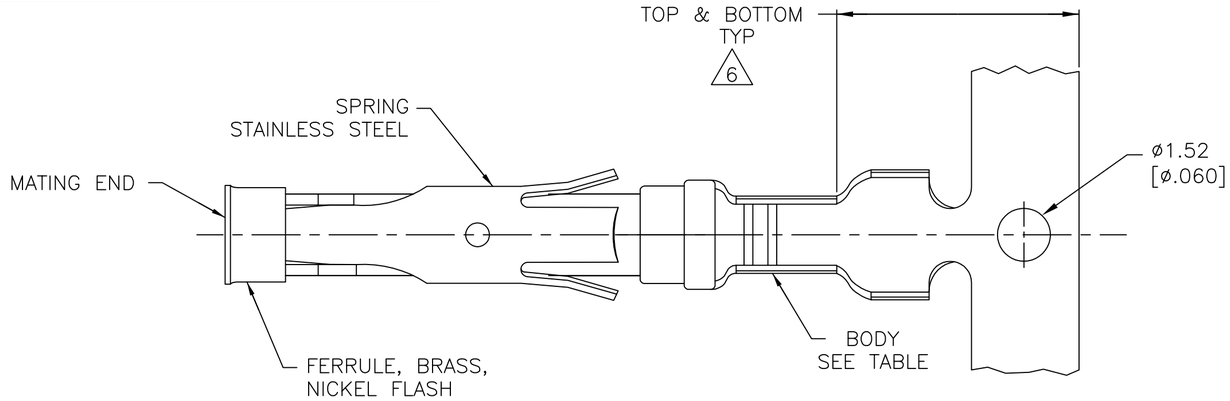

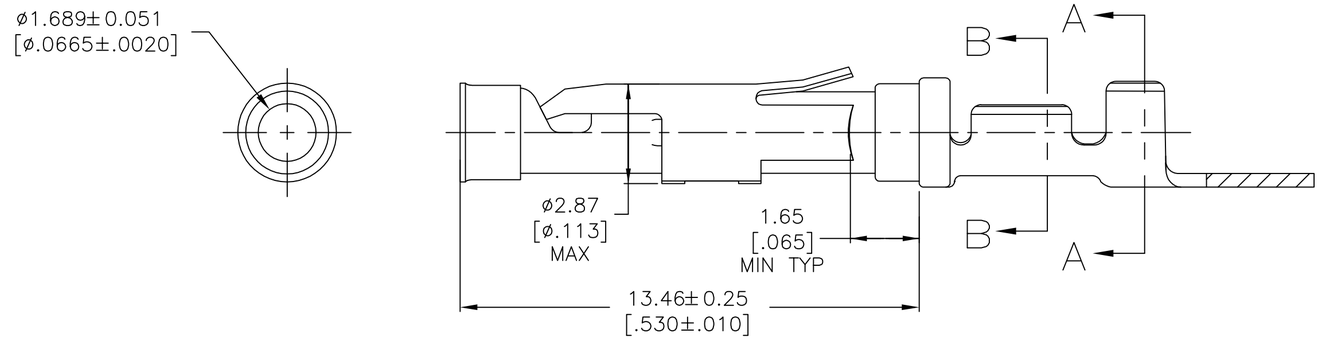

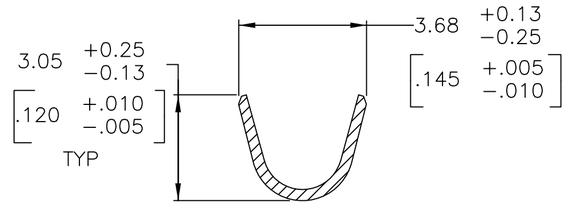

SECTION A–A

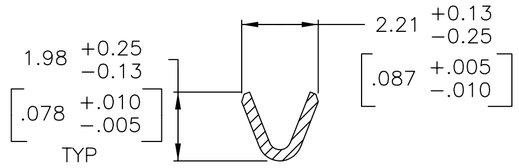

SECTION B–B

1. 0.76µm [.000030] MIN GOLD PER MIL-G-45204 ON MATING END FOR A LENGTH OF 5.08 [.200] MIN WITH 1.27µm[.000050] MIN MATTE TIN PLATE IN WIRE CRIMP AREA, BOTH OVER 0.76µm [.000030] MIN NICKEL PER QQ-N-290.
2. 1.27µm [.000050] MIN TIN-LEAD PER MIL-T-10727 OVER 0.76µm [.000030] MIN NICKEL PER QQ-N-290.
3. 0.76µm [.000030] MIN GOLD PER MIL-G-45204 ON MATING END FOR A LENGTH OF 5.08 [.200] MIN WITH A UNIFORM GRADIENT TO 0.25µm [.000010] MIN GOLD PER MIL-G-45204 ON THE REMAINDER OVER 0.76µm [.000030] MIN NICKEL PER QQ-N-290.
4. 0.38µm [.000015] MIN GOLD PER MIL-G-45204 ON MATING END FOR A LENGTH OF 5.08 [.200] MIN WITH 1.27µm[.000050] MIN MATTE TIN PLATE IN WIRE CRIMP AREA, BOTH OVER 0.76µm [.000030] MIN NICKEL PER QQ-N-290.
5. 1.27µm [.000050] MIN GOLD PER MIL-G-45204 ON MATING END FOR A LENGTH OF 5.08 [.200] MIN WITH GOLD FLASH ON REMAINDER OVER 0.76µm [.000030] MIN NICKEL PER QQ-N-290.
6. GOLD PLATING NEED NOT APPEAR IN THIS AREA.
7. REVERSE REELED FOR MINI-APPLICATOR.
8. WIRE RANGE 24-20 AWG. INSULATION RANGE 2.03[.080]-2.54[.100].
9. NOT RELEASED, AMP HOLLAND USE ONLY
10. 0.38µm [.000015] MIN GOLD PER MIL-G-45204 ON MATING END FOR A LENGTH OF 5.08 [.200] MIN, 1.27µm [.000050] MIN TIN-LEAD PER MIL-T-10727 FOR A LENGTH OF 5.69 [.224] MIN ON OPPOSITE END, BOTH OVER 1.27µm [.000050] MIN NICKEL PER QQ-N-290 ON ENTIRE CONTACT.
11. 1.27µm [.000050] MIN TIN PER MIL-T-10727 OVER 0.76µm [.000030] MIN NICKEL PER QQ-N-290.
12. OBSOLETE PARTS: OBSOLETE CIS STREAMLINING PER D.RENAUD/D.SINISI

	REELING	BODY FINISH	BODY MATERIAL	LOOSE PIECE REF	PART NO.
	STANDARD	11	BRASS	1-66399-0	1-66331-5
	7	11	BRASS	1-66399-0	1-66331-4
12 OBSOLETE	7	1	PHOSPHOR BRONZE	–	~~1-66331-3~~
OBSOLETE	7	10	BRASS	66399-5	1-66331-2
OBSOLETE	7	5	BRASS	–	1-66331-1
	–	–	BRASS	–	9 1-66331-0
OBSOLETE	–	–	BRASS	–	9 ~~66331-9~~
	7	1	BRASS	66399-4	66331-8
	7	4	BRASS	66399-3	66331-7
OBSOLETE	7	3	BRASS	66399-2	66331-6
	7	2	BRASS	66399-1	66331-5
	STANDARD	1	BRASS	66399-4	66331-4
	STANDARD	3	BRASS	66399-2	66331-2
	STANDARD	2	BRASS	66399-1	66331-1

THIS DRAWING IS A CONTROLLED DOCUMENT.

DIMENSIONS: mm [INCHES]

TOLERANCES UNLESS OTHERWISE SPECIFIED:
0 PLC ± –
1 PLC ± –
2 PLC ± 0.13 [.005]
3 PLC ± –
4 PLC ± –
ANGLES ± –

MATERIAL: SEE CALLOUTS
FINISH: SEE CALLOUTS

DWN R.SHIREY 08/06/91
CHK R.STONE 9-19-91
APVD J.WESTMAN 9-20-91
PRODUCT SPEC –
APPLICATION SPEC –
WEIGHT –

TE Connectivity

NAME: SOCKET ASSEMBLY, .062, TYPE III+

SIZE	CAGE CODE	DRAWING NO	RESTRICTED TO
A2	00779	C-66331	–

CUSTOMER DRAWING | SCALE 8:1 | SHEET 1 OF 1 | REV Z

66331

Mouser Electronics

Authorized Distributor

Click to View Pricing, Inventory, Delivery & Lifecycle Information:

TE Connectivity:
66331-6