THIS DRAWING IS UNPUBLISHED. RELEASED FOR PUBLICATION -.- .
© COPYRIGHT - BY TYCO ELECTRONICS CORPORATION. ALL RIGHTS RESERVED.

LOC	DIST
AD	00

REVISIONS

P	LTR	DESCRIPTION	DATE	DWN	APVD
	J	REV PER 0G3C-0010-03	09JAN03	MB	JO

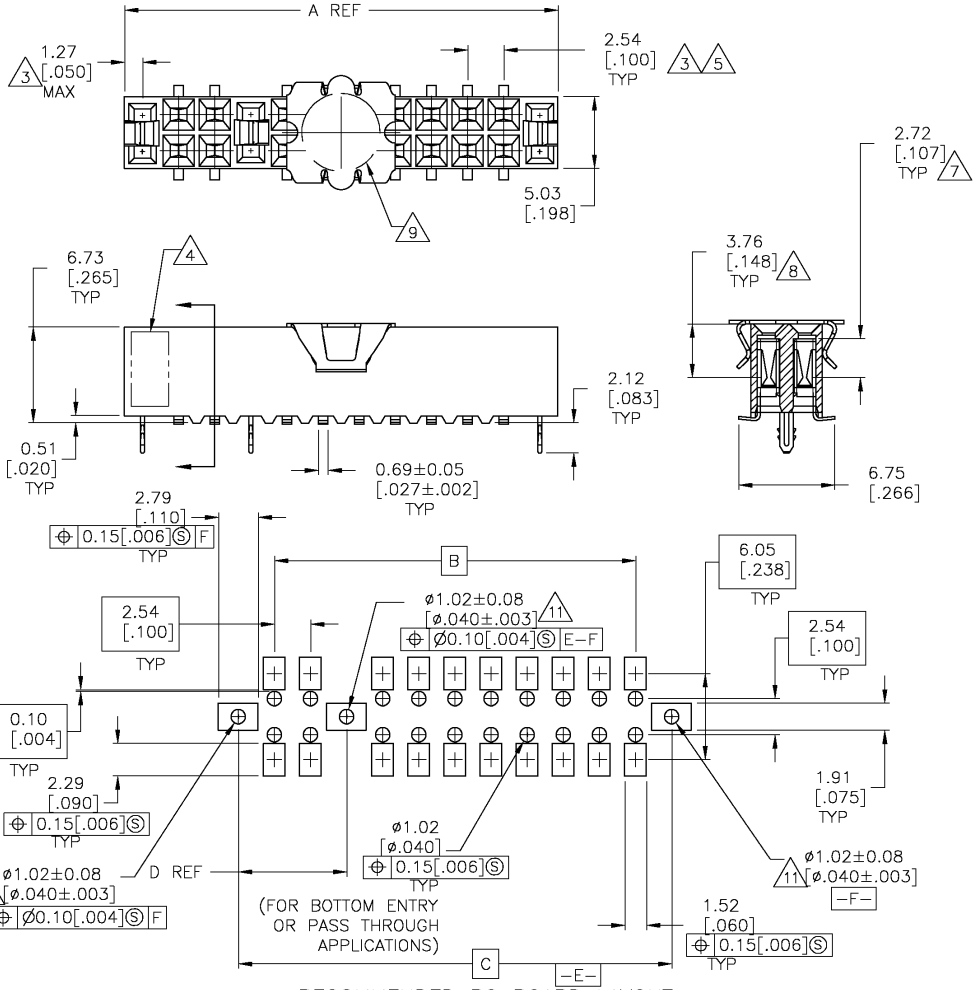

RECOMMENDED PC BOARD LAYOUT
0.20[.008] THICK STENCIL

D	C	B	A	NO OF POSN	PART NUMBER
53.34[2.100]	106.68[4.200]	99.06[3.900]	109.22[4.300]	80	4-147102-0
50.80[2.000]	104.14[4.100]	96.52[3.800]	106.68[4.200]	78	3-147102-9
50.80[2.000]	101.60[4.000]	93.98[3.700]	104.14[4.100]	76	3-147102-8
48.26[1.900]	99.06[3.900]	91.44[3.600]	101.60[4.000]	74	3-147102-7
48.26[1.900]	96.52[3.800]	88.90[3.500]	99.06[3.900]	72	3-147102-6
45.72[1.800]	93.98[3.700]	86.36[3.400]	96.52[3.800]	70	3-147102-5
10	88.90[3.500]	83.82[3.300]	91.44[3.600]	68	3-147102-4
10	86.36[3.400]	81.28[3.200]	88.90[3.500]	66	3-147102-3
10	83.82[3.300]	78.74[3.100]	86.36[3.400]	64	3-147102-2
10	81.28[3.200]	76.20[3.000]	83.82[3.300]	62	3-147102-1
10	78.74[3.100]	73.66[2.900]	81.28[3.200]	60	3-147102-0
10	76.20[3.000]	71.12[2.800]	78.74[3.100]	58	2-147102-9
10	73.66[2.900]	68.58[2.700]	76.20[3.000]	56	2-147102-8
10	71.12[2.800]	66.04[2.600]	73.66[2.900]	54	2-147102-7
10	68.58[2.700]	63.50[2.500]	71.12[2.800]	52	2-147102-6
10	66.04[2.600]	60.96[2.400]	68.58[2.700]	50	2-147102-5
10	63.50[2.500]	58.42[2.300]	66.04[2.600]	48	2-147102-4
10	60.96[2.400]	55.88[2.200]	63.50[2.500]	46	2-147102-3
10	58.42[2.300]	53.34[2.100]	60.96[2.400]	44	2-147102-2
10	55.88[2.200]	50.80[2.000]	58.42[2.300]	42	2-147102-1
10	53.34[2.100]	48.26[1.900]	55.88[2.200]	40	2-147102-0
10	50.80[2.000]	45.72[1.800]	53.34[2.100]	38	1-147102-9
10	48.26[1.900]	43.18[1.700]	50.80[2.000]	36	1-147102-8
10	45.72[1.800]	40.64[1.600]	48.26[1.900]	34	1-147102-7
10	43.18[1.700]	38.10[1.500]	45.72[1.800]	32	1-147102-6
10	40.64[1.600]	35.56[1.400]	43.18[1.700]	30	1-147102-5
10	38.10[1.500]	33.02[1.300]	40.64[1.600]	28	1-147102-4
10	35.56[1.400]	30.48[1.200]	38.10[1.500]	26	1-147102-3
10	33.02[1.300]	27.94[1.100]	35.56[1.400]	24	1-147102-2
10	30.48[1.200]	25.40[1.000]	33.02[1.300]	22	1-147102-1
10	27.94[1.100]	22.86[.900]	30.48[1.200]	20	1-147102-0
10	25.40[1.000]	20.32[.800]	27.94[1.100]	18	147102-9
10	22.86[.900]	17.78[.700]	25.40[1.000]	16	147102-8
10	20.32[.800]	15.24[.600]	22.86[.900]	14	147102-7
10	17.78[.700]	12.70[.500]	20.32[.800]	12	147102-6
10	15.24[.600]	10.16[.400]	17.78[.700]	10	147102-5
10	12.70[.500]	7.62[.300]	15.24[.600]	8	147102-4
10	10.16[.400]	5.08[.200]	12.70[.500]	6	147102-3
10	7.62[.300]	2.54[.100]	10.16[.400]	4	147102-2
OBSOLETE 10	5.08[.200]	-	7.62[.300]	2	6 147102-1

1. HOUSING: FLAME RETARDANT, GLASS FILLED, THERMOPLASTIC, COLOR: BLACK.
CONTACT: PHOSPHOR BRONZE
VACUUM COVER: STAINLESS STEEL
2. CONTACT: DUPLEX PLATED 0.25µm[.000010] MIN GOLD IN CONTACT AREA, 3.81-7.62µm[.000150-.000300] BRIGHT TIN-LEAD ON LEADS ALL OVER 1.27µm[.000050] NICKEL
3. THESE DIMENSIONS PERTAIN TO CAVITIY CENTERLINES ONLY NOT TO CONTACT LOACATIONS
4. TRADEMARK, AGENCY LOGO, AND DATE CODE ARE MOLDED IN OR MARKED. THE ORDER AND LOCATION IS OPTIONAL.
5. TOLERANCE IS NON-CUMULATIVE.
6. 2 POSITION DATE CODE IS MARKED OPPOSITE SIDE OF TYCO LOGO.
7. POINT-OF-MEASUREMENT DIMENSION FOR PLATING THICKNESS (INSIDE CONTACT BEAM).
8. POINT-OF-CONTACT DIMENSION.
9. ø5.51[.217] MIN TARGET AREA FOR VACUUM PICK UP. COVER TO BE REMOVED AFTER SOLDERING.
10. NO CENTER HOLD DOWN.
11. HOLES ø1.125±.025[.0453±.0010] DRILL SIZE [.03-0.08[.001-.003] COPPER PLATING. 0.007[.003] MIN 60/40 TIN LEAD ø0.94-1.09[.037-.043] AFTER PLATING, 0.25[.010] ANNULAR RING BOTH SIDES.
12. PACKAGED IN TUBES.

THIS DRAWING IS A CONTROLLED DOCUMENT.

DIMENSIONS: MM [INCHES]

TOLERANCES UNLESS OTHERWISE SPECIFIED:
0 PLC ± -
1 PLC ± -
2 PLC ± 0.13[.005]
3 PLC ± -
4 PLC ± -
ANGLES ± -

MATERIAL 1
FINISH 2

DWN M.BINNER 06NOV2002
CHK J.OLSON 06NOV02
APVD J.OLSON 06NOV02
PRODUCT SPEC 108-25022
APPLICATION SPEC 114-25018
WEIGHT -

tyco Electronics
Tyco Electronics Corporation
Harrisburg, PA 17105

NAME
RECEPTACLE ASSEMBLY, MOD IV, DOUBLE ROW, DUAL ENTRY, .100X.100CL, SURFACE MOUNT, AMPMODU

SIZE	CAGE CODE	DRAWING NO	RESTRICTED TO
A2	00779	C-147102	-

CUSTOMER DRAWING
SCALE 4:1 SHEET 1 OF 1 REV J