THIS DRAWING IS UNPUBLISHED. RELEASED FOR PUBLICATION -.-.
© COPYRIGHT - By - TE CONNECTIVITY ALL RIGHTS RESERVED.

LOC	DIST
CM	00

REVISIONS

P	LTR	DESCRIPTION	DATE	DWN	APVD
	D1	ECO-14-010907	10SEP2014	KR	OC

1. MATERIAL: CONNECTOR-NYLON UL94V-2 (GREEN). CONTACTS-0.30 [.012] THICK COPPER ALLOY 0.00076 [.000030] GOLD OR 0.00076[.000030] TOTAL GOLD FLASH OVER PALLADIUM NICKEL, PER TE CONNECTIVITY'S DISCRETION, IN CONTACT AREA WITH BRIGHT TIN-LEAD FOR 644044-2 THRU 2-644044-8, MATTE WHISKER MITIGATED TIN FOR 3-644044-2 THRU 5-644044-8 OVER NICKEL UNDERPLATE.
2. CONTACTS ACCEPT 28 AWG WIRE WITH 1.52 [.060] MAX INSULATION DIAMETER.
3. CONTACTS MUST ACCEPT 0.64±0.03 [.025±.001] SQUARE POST AND REMAIN LOCKED IN POSITION.
4. IDENTIFICATION NUMBER FOR LAST CIRCUIT MAY NOT APPEAR ON ALL ASSEMBLIES.
5. DIMENSIONS IN BRACKETS ARE IN INCHES.
6. HOUSING FEATURES ARE: CLOSED END WITH LOCKING RAMP AND WITH POLARIZING TAB.
7. OBSOLETE PARTS: OBSOLETE CIS STREAMLINING PER D.RENAUD/D.SINISI

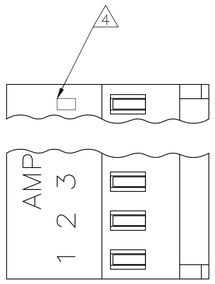

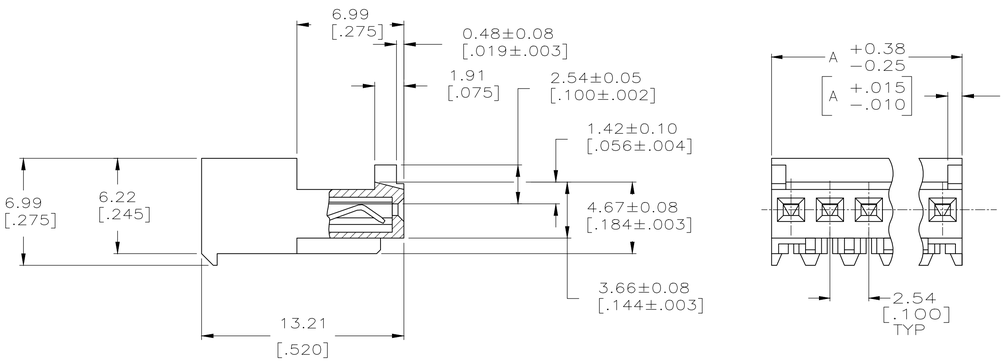

LEAD FREE			CONTAINS LEAD		
DIM A	NO.OF POSN	ASSEMBLY	DIM A	NO.OF POSN	ASSEMBLY
35.56 [1.400]	14	4-644044-4	35.56 [1.400]	14	7 ~~1-644044-4~~
33.02 [1.300]	13	4-644044-3	33.02 [1.300]	13	7 ~~1-644044-3~~
30.48 [1.200]	12	4-644044-2	30.48 [1.200]	12	7 ~~1-644044-2~~
27.94 [1.100]	11	4-644044-1	27.94 [1.100]	11	7 ~~1-644044-1~~
25.40 [1.000]	10	4-644044-0	25.40 [1.000]	10	1-644044-0
22.86 [.900]	9	3-644044-9	22.86 [.900]	9	7 ~~644044-9~~
20.32 [.800]	8	3-644044-8	20.32 [.800]	8	644044-8
17.78 [.700]	7	3-644044-7	17.78 [.700]	7	7 ~~644044-7~~
15.24 [.600]	6	3-644044-6	15.24 [.600]	6	7 ~~644044-6~~
12.70 [.500]	5	3-644044-5	12.70 [.500]	5	7 ~~644044-5~~
10.16 [.400]	4	3-644044-4	10.16 [.400]	4	7 ~~644044-4~~
7.62 [.300]	3	3-644044-3	7.62 [.300]	3	644044-3
5.08 [.200]	2	3-644044-2	5.08 [.200]	2	644044-2

METRIC

THIS DRAWING IS A CONTROLLED DOCUMENT.

DIMENSIONS: mm [INCHES]

TOLERANCES UNLESS OTHERWISE SPECIFIED:
0 PLC ±
1 PLC ±
2 PLC ± 0.13 [.005]
3 PLC ±
4 PLC ±
ANGLES ±

MATERIAL 1
FINISH 1

DWN S. HOOVER 28-DEC-2004
CHK D. BOSSI 28-DEC-2004
APVD D. BOSSI 28-DEC-2004
PRODUCT SPEC 108-1050
APPLICATION SPEC 114-1019
WEIGHT

TE Connectivity

NAME MTA .100 CONNECTOR ASSEMBLY 28 AWG, STANDARD

SIZE	CAGE CODE	DRAWING NO	RESTRICTED TO
A1	00779	C-644044	

CUSTOMER DRAWING SCALE 5:1 SHEET 1 OF 1 REV D1

4805 (3/11)

Mouser Electronics

Authorized Distributor

Click to View Pricing, Inventory, Delivery & Lifecycle Information:

TE Connectivity:

1-644044-0