THIS DRAWING IS UNPUBLISHED. RELEASED FOR PUBLICATION -,- .
© COPYRIGHT - By - ALL RIGHTS RESERVED.

REVISIONS					
P	LTR	DESCRIPTION	DATE	DWN	APVD
	AD3	REVISED PER ECR-16-017378	22DEC2016	LN	RS

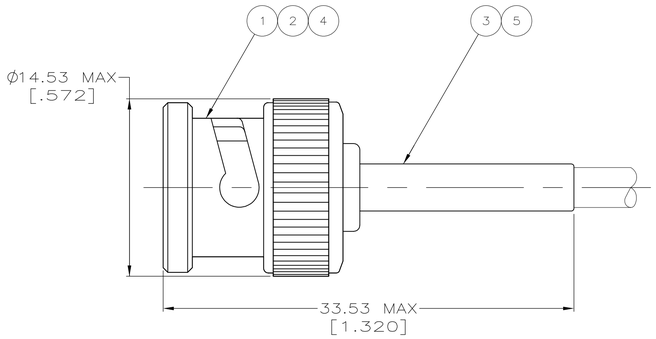

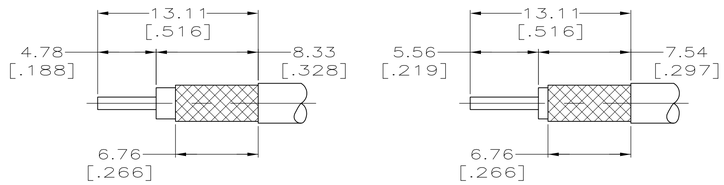

FIGURE 1 FIGURE 2

RECOMMENDED STRIP LENGTH

1. CABLE USED WITHOUT SPACER
2. CABLE USED WITH SPACER
3. SEE I.S. 9021
4. PARTS PACKAGED UNASSEMBLED
5. USE AMP HAND TOOL: 220190-1
6. SPECIAL PACKAGING: INDIVIDUALLY PACKAGED IN PRE-PRINTED BAG WITH SPECIAL GRAPHICS
7. CONNECTOR INDIVIDUALLY PACKAGED
8. BULK PACKAGE
9. RG-188/U, 316/U TYPE DOUBLE BRAID AND JIS CABLES 1.5D-2V, 1.5D-XV & 1.5D-XVS
10. SPECIAL PACKAGING: BULK PACKAGE 25 PIECES

REMARKS		FOR USE WITH CABLE	FERRULE HEX CRIMP HEIGHTS	CONTACT HEX CRIMP HEIGHTS	DIE SET 5	STRIP LENGTH	5 TUBING QTY=1	4 SPACER QTY=1	3 FERRULE QTY=1	2 CONTACT, PLUG QTY=1	1 PLUG ASSEMBLY QTY=1	PART NUMBER
OBSOLETE	6	RG-59/U, 59A/U, 59B/U	6.48 [.255]	1.73 [.068]	58465-1	FIG 1	-	227423-1	9-221132-1	222246-6	413636-2	9-221128-9
OBSOLETE	6	BELDEN 9907, 89907 & RG-141/U	5.41 [.213]	1.73 [.068]	58465-1	FIG 1	-	-	9-221132-0	1-222246-6	413636-1	9-221128-8
OBSOLETE	6	RG-180/U, 195/U	4.52 [.178]	1.73 [.068]	58465-3	FIG 1	-	-	9-413658-1	1-222246-3	413636-3	9-221128-7
	6	RG-179/U, 187/U	4.52 [.178]	1.73 [.068]	58465-3	FIG 1	227194-1	-	9-413658-0	1-222246-3	413636-3	9-221128-6
	6	RG-174/U, 188/U, 316/U	4.52 [.178]	1.73 [.068]	58465-3	FIG 1	227194-1	-	9-413658-0	1-222246-0	413636-3	9-221128-5
OBSOLETE	6	RG-58/U, 58A/U, 58B/U, 58C/U	5.41 [.213]	1.73 [.068]	58465-1	FIG 1	-	-	9-221132-0	222246-5	413636-1	9-221128-4
OBSOLETE	7	BELDEN 8281	8.23 [.324]	1.73 [.068]	58465-2	FIG 1	-	-	9-221132-2	222246-2	413636-4	9-221128-3
OBSOLETE	1 2 6	RG-62/U, 62A/U, 62B/U	6.48 [.255]	1.73 [.068]	58465-1	FIG 2	-	227423-1	9-221132-1	222246-4	413636-2	9-221128-2
		RG-59/U, 59A/U, 59B/U	6.48 [.255]	1.73 [.068]		FIG 1						
OBSOLETE	6	RG-58/U, 58A/U, 58B/U, 58C/U	5.41 [.213]	1.73 [.068]	58465-1	FIG 1	-	-	9-221132-0	222246-2	413636-1	9-221128-1
OBSOLETE		RG-58/U, 58A/U, 58B/U, 58C/U	5.41 [.213]	1.73 [.068]	58465-1	FIG 1	-	-	9-221132-0	222246-2	413636-1	9-221128-0
OBSOLETE	6	BELDEN 1167A	4.52 [.178]	1.73 [.068]	58465-3	FIG 1	-	-	9-413658-1	1-222246-0	413636-3	3-221128-4
OBSOLETE	10	9	4.52 [.178]	1.73 [.068]	58465-3	FIG 1	227194-1	-	9-413658-2	1-222246-0	413636-3	3-221128-2
	10	JIS CABLE 3D-2V	5.41 [.213]	1.73 [.068]	58465-1	FIG 1	-	-	8-221132-9	1-222246-6	413636-6	3-221128-1
SUPERSEDED BY 2-221128-5	8	RG-180/U, 195/U	4.52 [.178]	1.73 [.068]	58465-3	FIG 1	-	-	9-413658-1	1-222246-3	413636-3	3-221128-0
OBSOLETE	-	9	4.52 [.178]	1.73 [.068]	58465-3	FIG 1	227194-1	-	9-413658-2	1-222246-0	413636-3	2-221128-9
	6	BELDEN 9907, 89907 & RG-141/U	5.41 [.213]	1.73 [.068]	58465-1	FIG 1	-	-	9-221132-0	1-222246-6	413636-1	2-221128-7
OBSOLETE	6	RG-180/U, 195/U	4.52 [.178]	1.73 [.068]	58465-3	FIG 1	-	-	9-413658-1	1-222246-3	413636-3	2-221128-5
	6	RG-179/U, 187/U	4.52 [.178]	1.73 [.068]	58465-3	FIG 1	227194-1	-	9-413658-0	1-222246-3	413636-3	2-221128-3
SUPERSEDED BY 2-5221128-1	6	RG-174/U, 188/U, 316/U	4.52 [.178]	1.73 [.068]	58465-3	FIG 1	227194-1	-	9-413658-0	1-222246-0	413636-3	2-221128-1
OBSOLETE	6	RG-58/U, 58A/U, 58B/U, 58C/U	5.41 [.213]	1.73 [.068]	58465-1	FIG 1	-	-	9-221132-0	222246-5	413636-1	2-221128-0
SUPERSEDED BY 1-221128-2	6	BELDEN 8281	8.23 [.324]	1.73 [.068]	58465-2	FIG 1	-	-	9-221132-2	222246-5	413636-4	1-221128-9
	6	RG-59/U, 59A/U, 59B/U	6.48 [.255]	1.73 [.068]	58465-1	FIG 1	-	227423-1	9-221132-1	222246-6	413636-2	1-221128-8
	6	BELDEN 9266	6.48 [.255]	1.73 [.068]	58465-1	FIG 1	-	-	9-221132-1	222246-2	413636-2	1-221128-7
OBSOLETE	-	BELDEN 9209	6.48 [.255]	1.73 [.068]	58465-1	FIG 1	-	-	9-221132-1	222246-6	413636-5	1-221128-6
SUPERSEDED BY 1-221128-2	7	BELDEN 8281	8.23 [.324]	1.73 [.068]	58465-2	FIG 1	-	-	9-221132-2	222246-5	413636-4	1-221128-5
OBSOLETE	1 2 7	RG-62/U, 62A/U, 62B/U	6.48 [.255]	1.73 [.068]	58465-1	FIG 2	-	227423-1	9-221132-1	222246-6	413636-2	1-221128-4
		RG-59/U, 59A/U, 59B/U	6.48 [.255]	1.73 [.068]		FIG 1						
OBSOLETE	7	RG-58/U, 58A/U, 58B/U, 58C/U	5.41 [.213]	1.73 [.068]	58465-1	FIG 1	-	-	9-221132-0	222246-5	413636-1	1-221128-3
OBSOLETE	7	BELDEN 8281	8.23 [.324]	1.73 [.068]	58465-2	FIG 1	-	-	9-221132-2	222246-2	413636-4	1-221128-2
	1 2 6	RG-62/U, 62A/U, 62B/U	6.48 [.255]	1.73 [.068]	58465-1	FIG 2	-	227423-1	9-221132-1	222246-4	413636-2	1-221128-1
		RG-59/U, 59A/U, 59B/U	6.48 [.255]	1.73 [.068]		FIG 1						
	6	RG-58/U, 58A/U, 58B/U, 58C/U	5.41 [.213]	1.73 [.068]	58465-1	FIG 1	-	-	9-221132-0	222246-2	413636-1	1-221128-0
OBSOLETE	-	BELDEN 8281	8.23 [.324]	1.73 [.068]	58465-2	FIG 1	-	-	9-221132-2	222246-7	413636-4	221128-9
OBSOLETE	1 2	RG-62/U, 62A/U, 62B/U	6.48 [.255]	1.73 [.068]	58465-1	FIG 2	-	227423-1	9-221132-1	222246-8	413636-2	221128-8
		RG-59/U, 59A/U, 59B/U	6.48 [.255]	1.73 [.068]		FIG 1						
OBSOLETE	-	RG-58/U, 58A/U, 58B/U, 58C/U	5.41 [.213]	1.73 [.068]	58465-1	FIG 1	-	-	9-221132-0	222246-7	413636-1	221128-7
SUPERSEDED BY 221128-3	-	BELDEN 8281	8.23 [.324]	1.73 [.068]	58465-2	FIG 1	-	-	9-221132-2	222246-5	413636-4	221128-6
SUPERSEDED BY 221128-2	1 2	RG-62/U, 62A/U, 62B/U	6.48 [.255]	1.73 [.068]	58465-1	FIG 2	-	227423-1	9-221132-1	222246-6	413636-2	221128-5
		RG-59/U, 59A/U, 59B/U	6.48 [.255]	1.73 [.068]		FIG 1						
SUPERSEDED BY 221128-1	-	RG-58/U, 58A/U, 58B/U, 58C/U	5.41 [.213]	1.73 [.068]	58465-1	FIG 1	-	-	9-221132-0	222246-5	413636-1	221128-4
OBSOLETE	-	BELDEN 8281	8.23 [.324]	1.73 [.068]	58465-2	FIG 1	-	-	9-221132-2	222246-2	413636-4	221128-3
	1 2	RG-62/U, 62A/U, 62B/U	6.48 [.255]	1.73 [.068]	58465-1	FIG 2	-	227423-1	9-221132-1	222246-4	413636-2	221128-2
		RG-59/U, 59A/U, 59B/U	6.48 [.255]	1.73 [.068]		FIG 1						
	-	RG-58/U, 58A/U, 58B/U, 58C/U	5.41 [.213]	1.73 [.068]	58465-1	FIG 1	-	-	9-221132-0	222246-2	413636-1	221128-1

THIS DRAWING IS A CONTROLLED DOCUMENT.

DIMENSIONS: mm [INCHES]

TOLERANCES UNLESS OTHERWISE SPECIFIED:
0 PLC ± -
1 PLC ± -
2 PLC ± 0.41 [.016]
3 PLC ± -
4 PLC ± -
ANGLES ± -

MATERIAL -
FINISH -

DWN M. E. COWHER 11-18-92
CHK M. PHILLIPS 1-29-93
APVD M. PHILLIPS 1-29-93
PRODUCT SPEC —
APPLICATION SPEC —
WEIGHT 0.000000
CUSTOMER DRAWING

TE Connectivity

NAME PLUG, COMMERCIAL BNC

SIZE	CAGE CODE	DRAWING NO	RESTRICTED TO
A1	00779	C-221128	—

SCALE 4:1 SHEET 1 OF 1 REV AD3

Mouser Electronics

Authorized Distributor

Click to View Pricing, Inventory, Delivery & Lifecycle Information:

TE Connectivity:

1-221128-8