THIS DRAWING IS UNPUBLISHED. RELEASED FOR PUBLICATION 20
© COPYRIGHT 20 BY TYCO ELECTRONICS CORPORATION. ALL RIGHTS RESERVED.

FEED FINGER	SET UP GAGE	LOC	DIST
1901694-1	1901067-1	A	66

REVISIONS

P	LTR	DESCRIPTION	DATE	DWN	APVD
	A	RELEASED	05FEB2008	RD	RD
	B	ECR-08-006290	12MAR2008	RD	RD

PART NUMBER	REV	DESCRIPTION	PROGRAMMED MEMORY CHIP
19111198-1	B	CUTS CARRIER	8-19111198-1
19111198-6	B	CONTINUOUS CARRIER	8-19111198-6
7-19111198-1	B	-1 AND SPARE PARTS	9-19111198-1
7-19111198-6	B	-6 AND SPARE PARTS	9-19111198-6
7-19111198-7	A	SPARE PARTS KIT	-

APPLICATOR DATA		
CRIMP	SIZE	TYPE
WIRE	1.78mm [.070]	F
INSUL	2.54mm [.100]	F
APPL INSTRUCTIONS 408-10135		

TERMINAL DATA: TE TERMINAL		TYCO ELECTRONICS CRIMP SPEC
TERMINAL NAME: UNIVERSAL M-N-L PIN & SOCKET		
WIRE STRIP LENGTH 9.2-10.0 mm [.365-.395 IN]		INSULATION DIAMETER RANGE 1.02-2.54mm [.040-.100 IN]
TERMINAL APPL SPEC	114-1010	- -
	-	- -
TERMINALS APPLIED		
350851-1	350851-2	350851-7 350561-1
350561-2	350561-3	350561-5 350561-7
350561-8	-	- -

WIRE SIZE	CRIMP HEIGHT mm[INCH]
18AWG	1.22±.05 [.048±.002]
20AWG	1.09±.05 [.043±.002]
22AWG	1.02±.05 [.040±.002]
24AWG	.96±.05 [.038±.002]

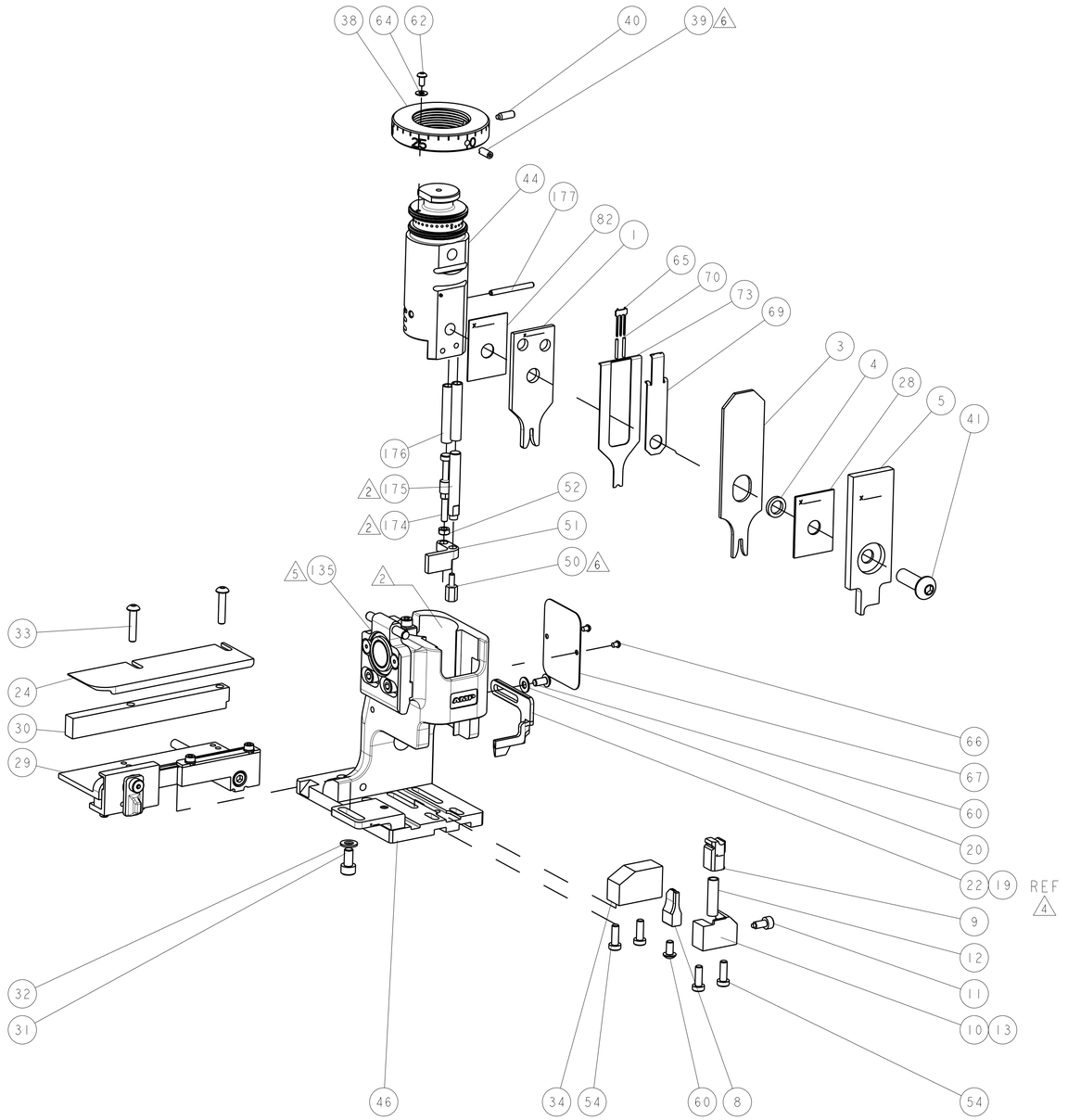

1. RECOMMENDED SPARE PARTS.
2. GREASE BEARING SURFACES LIGHTLY.
3. LUBRICATE DAILY PER THE APPLICATOR INSTRUCTION SHEET SUPPLIED WITH THE APPLICATOR.
4. ITEM 19 - OPTIONAL STRIPPER FOR BENCH MACHINE APPLICATIONS.
5. APPLICATOR SPECIFIC DATA TO BE ENTERED INTO BLANK MEMORY CHIP AT ASSEMBLY.
6. APPLY P/N 1-23419-5 LOCTITE(R) TO THREADS.

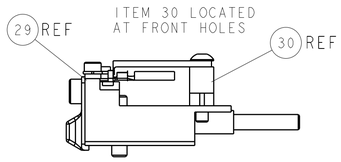

FEED TRACK POSITION

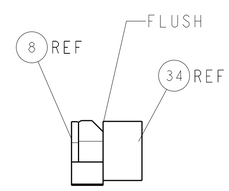

TERMINAL SUPPORT LOCATION

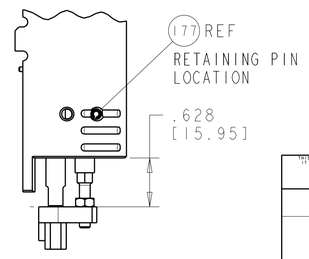

HOLDDOWN SET-UP

-	1	1	1	1	1-993111-6	PIN, SLOTTED SPRING 3.0 X 30.0	177
-	2	2	2	2	3-22280-7	SPRING, COMPRESSION	176
-	1	1	1	1	1752353-1	GUIDE PIN,HOLDDOWN	175
-	1	1	1	1	1901680-1	GUIDE PIN,HOLDDOWN	174
-	REF	REF	REF	REF	SEE TABLE	MEMORY CHIP, PROGRAMMED	135
-	1	1	1	1	455888-5	SPACER, CRIMPER	82
-	1	1	1	1	1490525-3	DEPRESSOR, WIRE	73
-	1	1	1	1	1633565-1	DOCUMENTATION PACKAGE	71
-	2	2	2	2	2-231147-2	SPRING, COMPRESSION	70
-	1	1	1	1	1490524-1	DEPRESSOR, SPACER	69
-	1	1	1	1	1901048-1	TAG,IDENTIFICATION	67
-	2	2	2	2	21017-1	SCREW, DRIVE	66
-	1	1	1	1	1424350-1	HOLDER, PIN, WIRED	65
-	1	1	1	1	18028-1	WASHER, FLAT, REG M3	64
-	1	1	1	1	1655785-9	SCR, BTN SKT HD CAP (M3 X 6)	62
-	2	2	2	2	1655785-1	SCR, BTN SKT HD CAP (M4 X 8)	60
-	4	4	4	4	1655783-3	SCR, CAP, SOC HD, LOW HEAD, M4 X 12	54
-	1	1	1	1	1-18030-0	NUT, HEX, REG M3.5	52
-	1	1	1	1	1901681-1	HOLDDOWN, TERMINAL	51
-	1	1	1	1	1-1752354-9	STANDOFF,HOLD-DOWN	50
-	1	1	1	1	1752300-1	SF SYSTEM III APPLICATOR	46
-	1	1	1	1	1752308-1	RAM	44
-	1	1	1	1	2-1655785-3	SCR, BTN SKT HD CAP (M8 X 25)	41
-	1	1	1	1	993002-4	SCREW,SET,SFT TIP	40
-	1	1	1	1	1962043-1	PLUNGER,BALL,METRIC	39
-	1	1	1	1	1752309-1	RING,INSULATION CRIMP	38
-	1	1	1	1	1752356-3	SUPPORT, TERMINAL	34
-	2	2	2	2	3-1655785-3	SCR, BTN SKT HD CAP (M4 X 20)	33
-	1	1	1	1	18028-3	WASHER, FLAT, REG M5	32
-	1	1	1	1	5-1655316-3	SCR, SKT HD CAP, M5 X 10.0	31
-	1	1	1	1	1320908-1	SPACER, STRIP GUIDE	30
-	1	1	1	1	1901087-1	ASSEMBLY, STRIP GUIDE	29
-	1	1	1	1	1-455888-0	SPACER, CRIMPER	28
-	1	1	1	1	1320928-1	PLATE, STRIP GUIDE	24
-	1	1	1	1	1976045-1	STRIPPER	22
-	1	1	1	1	18028-2	WASHER, FLAT, REG M4	20
1 -	REF	REF	REF	REF	1752311-1	STRIPPER	19
-	1	-	1	-	1338684-1	SHEAR HOLDER, FRONT	13
-	1	1	1	1	3-22280-3	SPRING, COMPRESSION	12
1 -	1	1	1	1	356885-4	STOP, SHEAR	11
1 -	-	1	-	1	1320921-1	SHEAR HOLDER, FRONT, CUT	10
1 -	1	1	1	1	462006-1	FLOATING SHEAR, FRONT	9
1	2	2	1	1	1338692-7	ANVIL, COMBINATION	8
-	1	1	1	1	2-455889-0	DEPRESSOR, SHEAR	5
1 -	1	1	1	1	2-238011-2	BLOCK, CRIMPER SPACER	4
1	2	2	1	1	4-456134-8	CRIMPER, INSULATION F PREMIUM	3
1	2	2	1	1	1-456404-8	CRIMPER, WIRE PREMIUM	1
-77	-76	-71	-6	-1	PART NO	DESCRIPTION	ITEM NO

THIS DRAWING IS A CONTROLLED DOCUMENT FOR TYCO ELECTRONICS CORPORATION IN-HOUSE USE. THIRD PARTIES WITHOUT A CONFIDENTIALITY AGREEMENT WITH THIS ORGANIZATION SHOULD BE CONTACTED FOR THE LATEST REVISION.

DIMENSIONS: INCHES[mm]

TOLERANCES UNLESS OTHERWISE SPECIFIED:
0 PLC ±-
1 PLC ±-
2 PLC ±-
3 PLC ±-
4 PLC ±-
ANGLES ±-

MATERIAL -
FINISH -
WEIGHT -

DWN R. DOBSON 15JAN2008
CHK R. DOBSON 15JAN2008
APVD N. DEMING 15JAN2008
PRODUCT SPEC -
APPLICATION SPEC SEE TABLE

Tyco Electronics
Tyco Electronics
Harrisburg, PA 17105-3608

NAME SIDE FEED SYSTEM III APPLICATOR

SIZE	CAGE CODE	DRAWING NO	RESTRICTED TO
A1	00779	C-19111198	-

CUSTOMER DRAWING | SCALE 3:5 | SHEET 1 OF 1 | REV B

AMP 4805 REV 31MAR2000

Pro/ENGINEER DRAWING

Mouser Electronics

Authorized Distributor

Click to View Pricing, Inventory, Delivery & Lifecycle Information:

TE Connectivity:

1911198-1