THIS DRAWING IS UNPUBLISHED. RELEASED FOR PUBLICATION -,- .
© COPYRIGHT - By - ALL RIGHTS RESERVED.

NOTES:
Tolerances cable lengths:

| | |
|---|---|
| 0m to 0.5m | +30mm |
| 0.5m to 1.0m | +50mm |
| 1.0m to 3.0m | +100mm |
| < 3.0m | +1.5% |

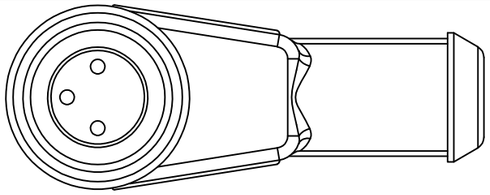

VIEW 'A'

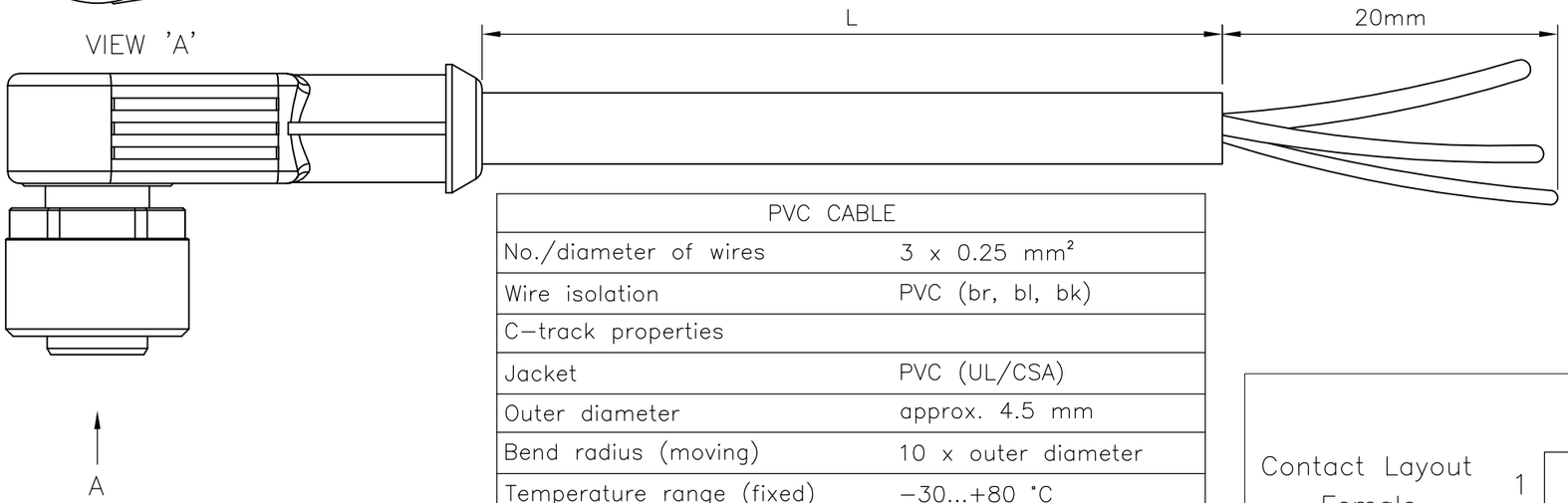


REVISIONS

| P | LTR | DESCRIPTION | DATE | DWN | APVD |
|---|---|---|---|---|---|
| | A1 | ECR-14-011671 | 14AUG2014 | GSK | BvH |
| | A2 | ECR-15-018018 | 11DEC2015 | RK | BvH |
| | A3 | ECR-16-003945 | 16MAR2016 | GSK | BvH |

| PVC CABLE | |
|---|---|
| No./diameter of wires | 3 x 0.25 mm² |
| Wire isolation | PVC (br, bl, bk) |
| C-track properties | |
| Jacket | PVC (UL/CSA) |
| Outer diameter | approx. 4.5 mm |
| Bend radius (moving) | 10 x outer diameter |
| Temperature range (fixed) | -30...+80 °C |
| Temperature range (mobile) | -5...+80 °C |

Schematic diagram

Contact Layout
Female

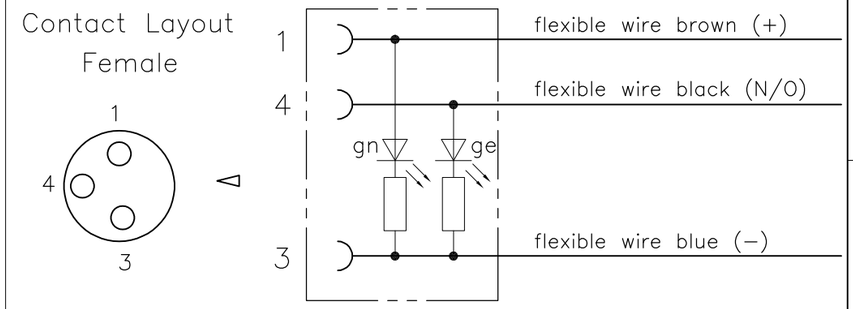


| TECHNICAL DATA | |
|---|---|
| Operating voltage | 24 V DC ±25 % |
| Operating current per contact | max. 4 A |
| Locking of ports | Screw thread M8 x 1 mm (recommended torque 0.4 Nm) self-securing |
| Protection | IP65 and IP67 when plugged and screwed down (EN 60529) |

| PUR CABLE | |
|---|---|
| No./diameter of wires | 3 x 0.25 mm² |
| Wire isolation | PP (br, bl, bk) |
| C-track properties | 5 million |
| Jacket | PUR (UL/CSA) |
| Outer diameter | approx. 4.1 mm |
| Bend radius (moving) | 10 x outer diameter |
| Temperature range (fixed) | -40...+80 °C |
| Temperature range (mobile) | -25...+80 °C |

| LENGTH"L" | MATERIAL | JACKET COLOR | TE PN | DESCRIPTION | ITEM |
|---|---|---|---|---|---|
| 3 pos 10mtr | PVC | Black | 1-2273012-4 | 3x22AWG PVC 10.0m | 8 |
| 3 pos 5mtr | PVC | Black | 1-2273012-3 | 3x22AWG PVC 5.0m | 7 |
| 3 pos 3mtr | PVC | Black | 1-2273012-2 | 3x22AWG PVC 3.0m | 6 |
| 3 pos 1.5mtr | PVC | Black | 1-2273012-1 | 3x22AWG PVC 1.5m | 5 |
| 3 pos 10mtr | PUR | Black | 2273012-4 | 4x22AWG PUR 10.0m | 4 |
| 3 pos 5mtr | PUR | Black | 2273012-3 | 3x22AWG PUR 5.0m | 3 |
| 3 pos 3mtr | PUR | Black | 2273012-2 | 3x22AWG PUR 3.0m | 2 |
| 3 pos 1.5mtr | PUR | Black | 2273012-1 | 3x22AWG PUR 1.5m | 1 |

THIS DRAWING IS A CONTROLLED DOCUMENT.

DIMENSIONS: mm

TOLERANCES UNLESS OTHERWISE SPECIFIED:
0 PLC ± -
1 PLC ± -
2 PLC ± -
3 PLC ± -
4 PLC ± -
ANGLES ± -

MATERIAL -
FINISH -

DWN SATHISH KUMAR .G 18JAN2013
CHK B.VELDHOVEN 18JAN2013
APVD A.VAN ZANDVOORT 18JAN2013
PRODUCT SPEC 108-19483
APPLICATION SPEC 114-32127
WEIGHT

TE Connectivity

NAME M8 X 1.0 ANGLED SOCKET PIGTAIL LED

SIZE A3 | CAGE CODE 00779 | DRAWING NO C-2273012 | RESTRICTED TO —

CUSTOMER DRAWING | SCALE NTS | SHEET 1 OF 1 | REV A3

# Mouser Electronics

Authorized Distributor

Click to View Pricing, Inventory, Delivery & Lifecycle Information:

TE Connectivity:

2273012-2