THIS DRAWING IS UNPUBLISHED. RELEASED FOR PUBLICATION - ,- .
© COPYRIGHT - By - ALL RIGHTS RESERVED.

LOC	DIST
AD	00

REVISIONS

P	LTR	DESCRIPTION	DATE	DWN	APVD
	N2	REVISED PER ECO-11-004587	11MAR11	RK	HMR

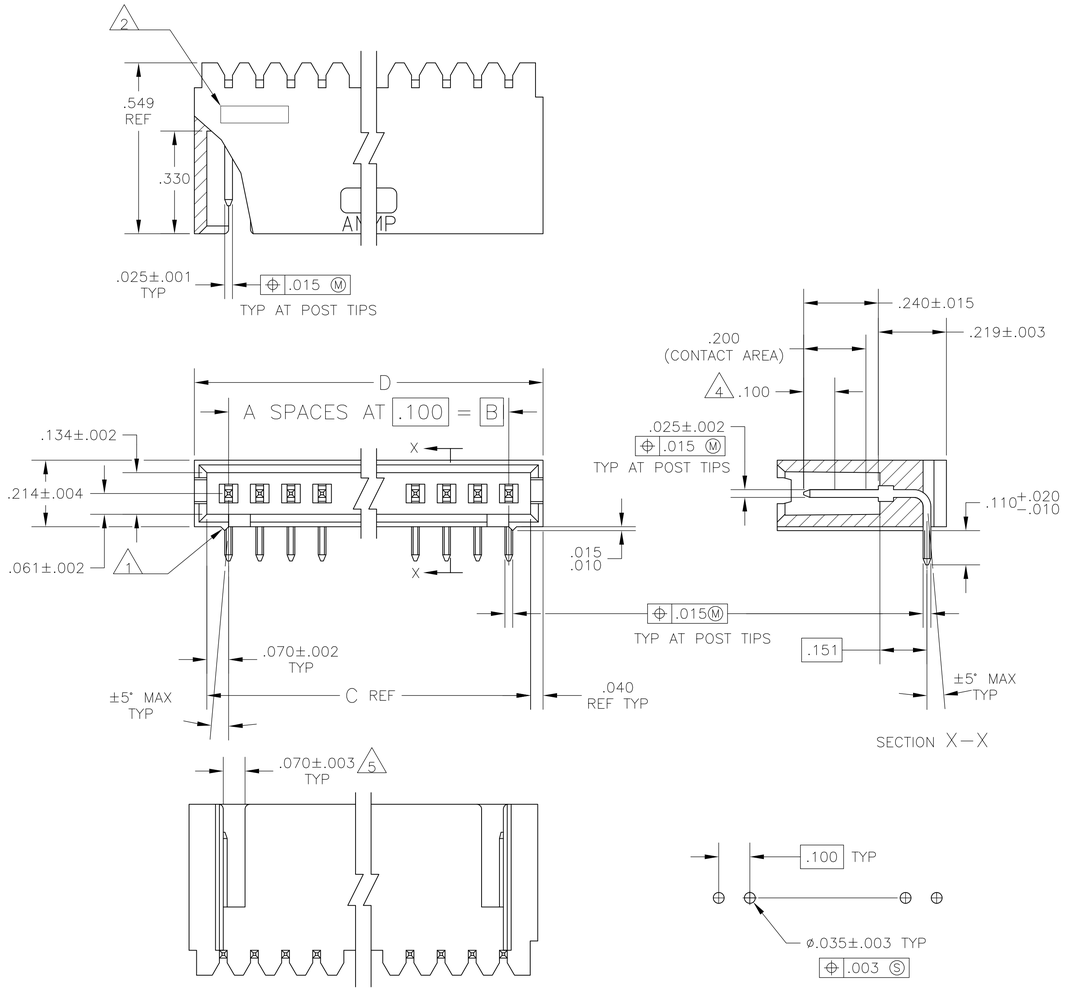

RECOMMENDED HOLE LAYOUT

1 STANDOFFS:
3 TRHU 9 POSN – (2 REQD) ON OUTSIDE ENDS OF HOUSING
10 THRU 18 POSN – (3 REQD) TWO ON OUTSIDE ENDS AND ONE CENTERED ON HOUSING
19 POSN AND LARGER – (4 REQD) TWO ON OUTSIDE ENDS AND TWO EVENLY SPACED WITHIN REMAINING LENGTH OF HOUSING

2 RECESSED DATE CODE

3 .000030 GOLD IN CONTACT AREA, .000100–.000200 MATTE TIN–LEAD IN SOLDER AREA, ALL OVER .000050 MIN NICKEL

4 POINT OF MEASUREMENT FOR GOLD PLATING THICKNESS

5 FOR 3 POS ONLY, ONE SLOT .215 WIDE.

6 .000030 GOLD IN CONTACT AREA, .000100–.000200 MATTE TIN IN SOLDER AREA, ALL OVER .000050 MIN NICKEL

7 OBSOLETE PARTS: OBSOLETE CIS STREAMLINING PER D.RENAUD/D.SINISI

7 OBSOLETE	6	2.620	2.540	2.400	24	25	~~7-103361-3~~
	6	2.520	2.440	2.300	23	24	7-103361-2
7 OBSOLETE	6	2.420	2.340	2.200	22	23	~~7-103361-1~~
	6	2.320	2.240	2.100	21	22	~~7-103361-0~~
	6	2.220	2.140	2.000	20	21	~~6-103361-9~~
	6	2.120	2.040	1.900	19	20	6-103361-8
7 OBSOLETE	6	2.020	1.940	1.800	18	19	~~6-103361-7~~
	6	1.920	1.840	1.700	17	18	~~6-103361-6~~
	6	1.820	1.740	1.600	16	17	~~6-103361-5~~
	6	1.720	1.640	1.500	15	16	6-103361-4
7 OBSOLETE	6	1.620	1.540	1.400	14	15	~~6-103361-3~~
	6	1.520	1.440	1.300	13	14	6-103361-2
7 OBSOLETE	6	1.420	1.340	1.200	12	13	~~6-103361-1~~
	6	1.320	1.240	1.100	11	12	6-103361-0
7 OBSOLETE	6	1.220	1.140	1.000	10	11	~~5-103361-9~~
	6	1.120	1.040	.900	9	10	5-103361-8
	6	1.020	.940	.800	8	9	5-103361-7
	6	.920	.840	.700	7	8	5-103361-6
	6	.820	.740	.600	6	7	5-103361-5
	6	.720	.640	.500	5	6	5-103361-4
	6	.620	.540	.400	4	5	5-103361-3
	6	.520	.440	.300	3	4	5-103361-2
	6	.420	.340	.200	2	3	5-103361-1
OBSOLETE	3	3.720	3.640	3.500	35	36	3-103361-4
OBSOLETE	3	3.620	3.540	3.400	34	35	3-103361-3
OBSOLETE	3	3.520	3.440	3.300	33	34	3-103361-2
OBSOLETE	3	3.420	3.340	3.200	32	33	3-103361-1
OBSOLETE	3	3.320	3.240	3.100	31	32	3-103361-0
OBSOLETE	3	3.220	3.140	3.000	30	31	2-103361-9
OBSOLETE	3	3.120	3.040	2.900	29	30	2-103361-8
OBSOLETE	3	3.020	2.940	2.800	28	29	2-103361-7
OBSOLETE	3	2.920	2.840	2.700	27	28	2-103361-6
OBSOLETE	3	2.820	2.740	2.600	26	27	2-103361-5
OBSOLETE	3	2.720	2.640	2.500	25	26	2-103361-4
7 OBSOLETE	3	2.620	2.540	2.400	24	25	~~2-103361-3~~
	3	2.520	2.440	2.300	23	24	2-103361-2
7 OBSOLETE	3	2.420	2.340	2.200	22	23	~~2-103361-1~~
	3	2.320	2.240	2.100	21	22	~~2-103361-0~~
	3	2.220	2.140	2.000	20	21	~~1-103361-9~~
	3	2.120	2.040	1.900	19	20	1-103361-8
7 OBSOLETE	3	2.020	1.940	1.800	18	19	~~1-103361-7~~
	3	1.920	1.840	1.700	17	18	~~1-103361-6~~
	3	1.820	1.740	1.600	16	17	~~1-103361-5~~
	3	1.720	1.640	1.500	15	16	1-103361-4
7 OBSOLETE	3	1.620	1.540	1.400	14	15	~~1-103361-3~~
	3	1.520	1.440	1.300	13	14	1-103361-2
	3	1.420	1.340	1.200	12	13	1-103361-1
	3	1.320	1.240	1.100	11	12	1-103361-0
7 OBSOLETE	3	1.220	1.140	1.000	10	11	~~103361-9~~
	3	1.120	1.040	.900	9	10	103361-8
	3	1.020	.940	.800	8	9	103361-7
	3	.920	.840	.700	7	8	103361-6
	3	.820	.740	.600	6	7	103361-5
	3	.720	.640	.500	5	6	103361-4
	3	.620	.540	.400	4	5	103361-3
	3	.520	.440	.300	3	4	103361-2
	3	.420	.340	.200	2	3	103361-1
PLATING	D	C	B	A	NO. OF POSN.	PART NO.	

THIS DRAWING IS A CONTROLLED DOCUMENT.

DIMENSIONS: INCHES

TOLERANCES, UNLESS OTHERWISE SPECIFIED:
0 PLC ± –
1 PLC ± –
2 PLC ± –
3 PLC ± .005
4 PLC ± –
ANGLES ± –

MATERIAL HOUSING : FLAME RETARDANT THERMOPLASTIC; COLOR–BLACK
POSTS:PHOS BRONZE

FINISH SEE TABLE

DWN S.A.SHUEY 28SEP89
CHK H.MOLL 30OCT89
APVD R.FLICKER 30OCT89

PRODUCT SPEC –
APPLICATION SPEC –
WEIGHT –

TE Connectivity

NAME HEADER ASSEMBLY, MOD II, SINGLE ROW .100 CL, RIGHT ANGLE –

SIZE	CAGE CODE	DRAWING NO	RESTRICTED TO
A1	00779	C-103361	–

CUSTOMER DRAWING SCALE 4:1 SHEET 1 OF 1 REV N2

4805 (3/11)

Mouser Electronics

Authorized Distributor

Click to View Pricing, Inventory, Delivery & Lifecycle Information:

TE Connectivity:

1-103361-8