THIS DRAWING IS UNPUBLISHED. RELEASED FOR PUBLICATION - , - .
© COPYRIGHT - By - ALL RIGHTS RESERVED.

REVISIONS

P	LTR	DESCRIPTION	DATE	DWN	APVD
	Y3	REVISED PER ECR-15-014064	03MAR2016	NK	NL

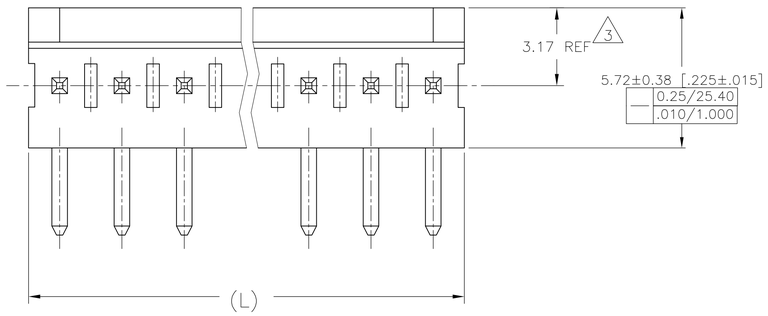

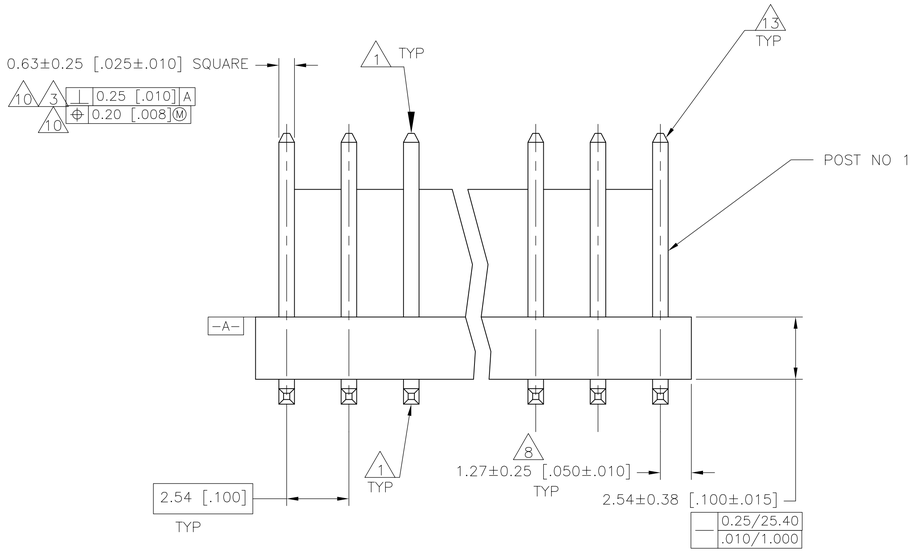

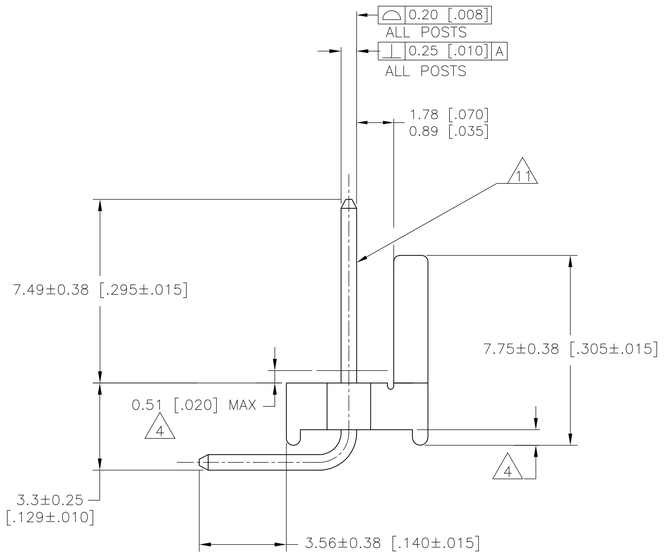

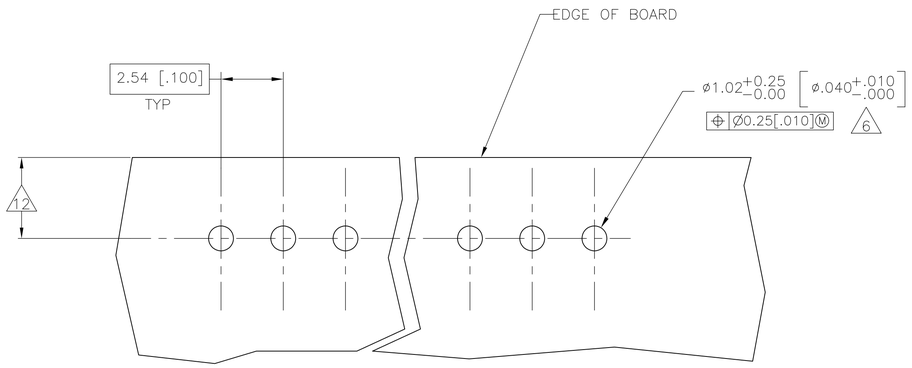

RECOMMENDED MOUNTING HOLE PATTERN
FOR 1.60 [.063] THICK P.C. BOARD 2

1. POST TO WITHSTAND 13 NEWTONS [3 LBS.] MIN. AXIAL FORCE IN BOTH DIRECTIONS SHOWN WITHOUT DISLODGING.
2. TOLERANCES APPLY TO SOLDER SIDE OF BOARD.
3. MEASURED AT SURFACE -A-
4. PLASTIC FLASH PERMITTED IN THIS AREA.
5. PARTS COMPLY WITH SOLDERABILITY SPEC. 109-11-2
6. ONE HOLE MAY BE UNDERSIZED 0.81-0.89 [.032-.035] DIA. FOR ASSEMBLY RETENTION DURING WAVE SOLDERING.
7. MATERIAL: HEADER-THERMOPLASTIC POLYESTER 94V-0(NATURAL)
   POST-COPPER ALLOY (TIN PLATED)
8. COORDINATE DIMENSION APPLIES FROM CENTER OF ACTUAL FEATURE.
9. PLASTIC BURRS CAUSED BY CUT-OFF TOOLING ARE PERMITTED WITHIN THE MAXIMUM TOLERANCE ENVELOPE.
10. POSTS TO BE MEASURED WHEN STRIP IS HELD FLAT.
11. POSTS MUST WITHSTAND TWO 90° BENDS AGAINST EXTRUSION WITHOUT BREAKING.
12. DIMENSION SHOULD BE 2.79-4.06 [.110-.160] WHEN MATING WITH A MTA 100 CONNECTOR ASSEMBLY OR 2.79-3.05 [.110-.120] WHEN MATING WITH A CST 100 CONNECTOR.
13. PIN BURR OF 0.13 [.005] MAX. VERTICAL AND 0.08 [.003] MAX. HORIZONTAL PERMITTED AT POST TIPS ON BOTH ENDS.

MM	[IN]	NO OF POSITIONS	PART NUMBER
L			
71.12	2.800	28	2-640455-8
68.58	2.700	27	2-640455-7
66.04	2.600	26	2-640455-6
63.50	2.500	25	2-640455-5
60.96	2.400	24	2-640455-4
58.42	2.300	23	2-640455-3
55.88	2.200	22	2-640455-2
53.34	2.100	21	2-640455-1
50.80	2.000	20	2-640455-0
48.26	1.900	19	1-640455-9
45.72	1.800	18	1-640455-8
43.18	1.700	17	1-640455-7
40.64	1.600	16	1-640455-6
38.10	1.500	15	1-640455-5
35.56	1.400	14	1-640455-4
33.02	1.300	13	1-640455-3
30.48	1.200	12	1-640455-2
27.94	1.100	11	1-640455-1
25.40	1.000	10	1-640455-0
22.86	.900	9	640455-9
20.32	.800	8	640455-8
17.78	.700	7	640455-7
15.24	.600	6	640455-6
12.70	.500	5	640455-5
10.16	.400	4	640455-4
7.62	.300	3	640455-3
5.08	.200	2	640455-2

THIS DRAWING IS A CONTROLLED DOCUMENT.

DIMENSIONS: mm [INCHES]

TOLERANCES UNLESS OTHERWISE SPECIFIED:
0 PLC ± -
1 PLC ± -
2 PLC ± -
3 PLC ± 0.13 [.005]
4 PLC ± -
ANGLES ± 0°30'

MATERIAL 7 FINISH 7

DWN S. HAMM 22-OCT-2001
CHK D. BOSSI 22-OCT-2001
APVD D. BOSSI 22-OCT-2001
PRODUCT SPEC —
APPLICATION SPEC —
WEIGHT —

TE Connectivity

NAME MTA-.100 HDR ASSY, POLARIZED, NOTCHED, .025 SQUARE RIGHT ANGLE POST, TIN PLATED

SIZE A1 | CAGE CODE 00779 | DRAWING NO C-640455 | RESTRICTED TO —

CUSTOMER DRAWING | SCALE 8:1 | SHEET 1 OF 1 | REV Y3

4805 (1/15)

Mouser Electronics

Authorized Distributor

Click to View Pricing, Inventory, Delivery & Lifecycle Information:

TE Connectivity:

1-640455-7