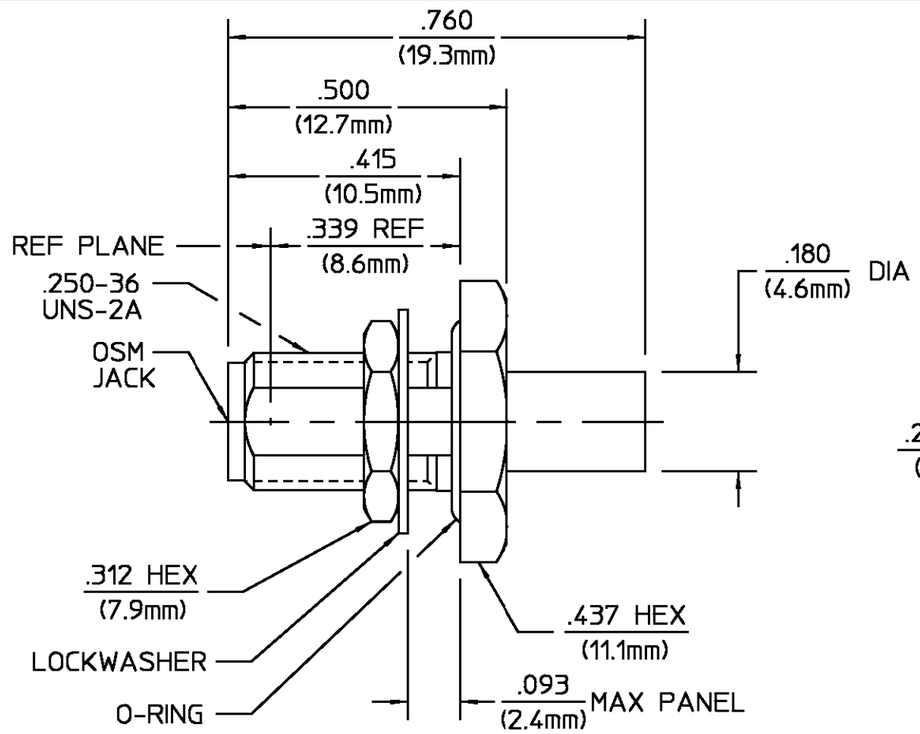

DESIGNED FOR USE WITH .141 DIA S/R CABLE	
CABLE ENTRY DIAMETER MINIMUM	
HOUSING	.144
CONTACT	.037

REVISIONS

REV	DESCRIPTION	DATE	APPROVED
03_2	REDRAWN IN CAD ECN 92-0010	8/2/93	8/3/93

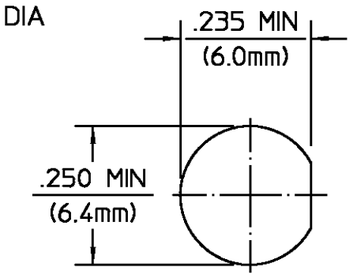

RECOMMENDED MOUNTING HOLE

ELECTRICAL	
Nominal Impedance (Ohms)	50
Frequency Range (GHz) DC to	18
Volt Rating (VRMS MAX)	
@ Sea Level	500
VSWR	1.05+.008f(GHz)
Insertion Loss (dB MAX)	03 $\sqrt{f(GHz)}$
RF Leakage (dB MIN)	-[90-f(GHz)]
Corona, 70,000 Ft (VRMS MIN)	375
Dielectric Withstanding Voltage	
(VRMS MIN) @ Sea Level	1500
Contact Resistance (Milliohms MAX)	
Center Contact	3.0
Outer Contact	2.0
Cable to Housing	0.5
RF High Potential @ Sea Level	
(VRMS MIN @ 5 MHz)	1000
I.R.(Megohms MIN)	10000

MECHANICAL	
Interface Dimensions MIL-STD-348A,	
Fig. 310.2	
Recommended Mating	
Torque	7-10 In Lbs
Mating Characteristics:	
Insertion (MAX Lbs)	3.0
Withdrawal (MIN Oz)	1.0
Force to Engage and	
Disengage (In-Lbs MAX)	2.0
Center Contact Captivation	
Axial (Lbs)	N/A
Radial (In-Oz)	N/A
Cable Retention	
Axial Force (Lbs)	60 MIN
Torque (In-Oz)	55 MIN
Weight (Oz)	.12

ENVIRONMENTAL
Temperature Rating -65°C to +105°C
Vibration MIL-STD-202, Method 204, Condition D
Shock MIL-STD-202, Method 213, Condition I
Thermal Shock MIL-STD-202, Method 107, Condition B, Except High Temp shall be +115°C
Moisture Resistance MIL-STD-202, Method 106
Corrosion - MIL-STD-202, Method 101, Condition B, 5% salt spray

COMPONENT	MATERIAL	FINISH
HOUSING MOUNTING NUT LOCKWASHER	STAINLESS STEEL PER ASTM-A484 AND ASTM-A582, TYPE 303	GOLD PLATE PER MIL-G-45204 OVER NICKEL PLATE PER QQ-N-290
DIELECTRIC	TFE FLUOROCARBON PER ASTM-D-1457	N/A
CENTER CONTACT	BERYLLIUM COPPER PER ASTM B 196, ALLOY C17300, CONDITION H	GOLD PLATE PER MIL-G-45204 OVER COPPER PLATE PER MIL-C-14550
"O" - RING	SILICONE RUBBER PER ZZ-R-765	N/A

UNLESS OTHERWISE SPECIFIED DIMENSIONS ARE IN INCHES TOLERANCE ON
FRAC. ± 1/64 DEC. ±.005 ANGLES ± 1°

DRAWN BY RMK DATE 7/9/69
CHECKED BY BWC 7/9/69
APP'D BY D.NANIA 7/10/69

AMP

AMP Incorporated
140 Fourth Avenue
Waltham, MA 02451-7599

These drawings and specifications are the property of Omni Spectra Incorporated and shall not be reproduced or copied or used in whole or in part as the basis for the manufacture or sale of item(s) without written permission.

USE ASS'Y PROCEDURE

408-04768
NO. A.P. (20-013)

TITLE OSM BULKHEAD FEEDTHROUGH CABLE JACK - DIRECT SOLDER ATTACHMENT

SIZE	CODE IDENT NO.		REV
B	26805	2004-7941-00	03_2
SCALE 4:1			SHEET 1 OF 1

CUSTOMER DRAWING

AMP PART # 1051013-1
SHEET 1 OF 1 REV A

Mouser Electronics

Authorized Distributor

Click to View Pricing, Inventory, Delivery & Lifecycle Information:

TE Connectivity:

2004-7941-00