THIS DRAWING IS UNPUBLISHED. RELEASED FOR PUBLICATION 2000
© COPYRIGHT 2000 BY - TE Connectivity ALL RIGHTS RESERVED.

REVISIONS					
F	LTR	DESCRIPTION	DATE	DWN	APVD
	A2	REDRAWN AND REVISED FOR ECR 06-003008	21FEB2006	MP	RM
	A3	REDRAWN FOR ECR-08-013212	03JUN2008	DS	RM
	A4	ECR-15-008793	16JUN2015	GN	GB
	A5	PART REV.CORRECTION:5-1437710-5-6-7-8	22JUL2016	GB	SzG

HOUSING MALE WITH RETAINER

FULL SIZE VIEWS

SCALE 1:1

HOUSING MALE WITHOUT RETAINER

A4

PART AS SUPPLIED				COMPONENTS			COLOURS			MATERIALS			SUITABLE FOR			MATING PARTS	
TE PART No.	DESCRIPTION	WATERPROOF	WEIGHT	1 HUOSING	2 SPACER	3 SEAL	1 HOUSING	2 SPACER	3 SEAL	1 HOUSING	2 SPACER	3 SEAL	TERMINAL FEMALE	WIRE SEAL	BLIND PLUG	TE PART No.	DESCRIPTION
5-1437710-5	2 WAY MALE CONNECTOR	YES	4.66 gr.	1	1	1	BLACK	LIGHT BLUE	REDDISH BROWN	HS - PBTP 30% GF	PBTP 33% GF	SILICONE ELASTOMER	0-1437709-9 (0.22-0.35mm²) GOLD PLATED 1-1437709-0 (0.50-1.00mm²) GOLD PLATED 1-1437709-7 (1.50mm²) GOLD PLATED 1-1437709-4 (0.22-0.35mm²) TIN PLATED 1-1437709-5 (0.50-1.00mm²) TIN PLATED 1-1437709-6 (1.50mm²) TIN PLATED	1-1437713-1 (0.22-0.35) BLACK 1-1437713-2 (0.50-1.00) RED 1-1437713-3 (1.50) BLUE	1-1437713-4	2-1437712-5	2 WAY FEMALE CONNECTOR WATERPROOF
5-1437710-6	2 WAY MALE CONNECTOR WITH RETAINER		5.06 gr.	1	1	1											
5-1437710-7	2 WAY MALE CONNECTOR	NO	4.64 gr.	1	1			RED					0-1437709-9 (0.22-0.35mm²) GOLD PLATED 1-1437709-0 (0.50-1.00mm²) GOLD PLATED 1-1437709-7 (1.50mm²) GOLD PLATED 1-1437709-4 (0.22-0.35mm²) TIN PLATED 1-1437709-5 (0.50-1.00mm²) TIN PLATED 1-1437709-6 (1.50mm²) TIN PLATED			2-1437713-6	2 WAY FEMALE CONNECTOR NON WATERPROOF
5-1437710-8	2 WAY MALE CONNECTOR WITH RETAINER		4.84 gr.	1	1												

PART AS SUPPLIED				COMPONENTS			COLOURS			MATERIALS			SUITABLE FOR			MATING PARTS	
TE PART No.	DESCRIPTION	WATERPROOF	WEIGHT	1 HUOSING	2 SPACER	3 SEAL	1 HOUSING	2 SPACER	3 SEAL	1 HOUSING	2 SPACER	3 SEAL	TERMINAL FEMALE	WIRE SEAL	BLIND PLUG	TE PART No.	DESCRIPTION
6-1437710-6	2 WAY MALE CONNECTOR	YES	4.66 gr.	1	1	1	NATURAL	LIGHT BLUE	REDDISH BROWN	PBTP 33% GF	PBTP 33% GF	SILICONE ELASTOMER	0-1437709-9 (0.22-0.35mm²) GOLD PLATED 1-1437709-0 (0.50-1.00mm²) GOLD PLATED 1-1437709-7 (1.50mm²) GOLD PLATED 1-1437709-4 (0.22-0.35mm²) TIN PLATED 1-1437709-5 (0.50-1.00mm²) TIN PLATED 1-1437709-6 (1.50mm²) TIN PLATED	1-1437713-1 (0.22-0.35) BLACK 1-1437713-2 (0.50-1.00) RED 1-1437713-3 (1.50) BLUE	1-1437713-4	2-1437712-8	2 WAY FEMALE CONNECTOR WATERPROOF
6-1437710-7	2 WAY MALE CONNECTOR WITH RETAINER		5.06 gr.	1	1	1											
6-1437710-8	2 WAY MALE CONNECTOR	NO	4.64 gr.	1	1			RED					0-1437709-9 (0.22-0.35mm²) GOLD PLATED 1-1437709-0 (0.50-1.00mm²) GOLD PLATED 1-1437709-7 (1.50mm²) GOLD PLATED 1-1437709-4 (0.22-0.35mm²) TIN PLATED 1-1437709-5 (0.50-1.00mm²) TIN PLATED 1-1437709-6 (1.50mm²) TIN PLATED			2-1437713-8	2 WAY FEMALE CONNECTOR NON WATERPROOF
6-1437710-9	2 WAY MALE CONNECTOR WITH RETAINER		4.84 gr.	1	1												

PART AS SUPPLIED				COMPONENTS			COLOURS			MATERIALS			SUITABLE FOR			MATING PARTS	
TE PART No.	DESCRIPTION	WATERPROOF	WEIGHT	1 HUOSING	2 SPACER	3 SEAL	1 HOUSING	2 SPACER	3 SEAL	1 HOUSING	2 SPACER	3 SEAL	TERMINAL FEMALE	WIRE SEAL	BLIND PLUG	TE PART No.	DESCRIPTION
-	2 WAY MALE CONNECTOR	YES	-	1	1	1	RED	LIGHT BLUE	REDDISH BROWN	PBTP 33% GF	PBTP 33% GF	SILICONE ELASTOMER	0-1437709-9 (0.22-0.35mm²) GOLD PLATED 1-1437709-0 (0.50-1.00mm²) GOLD PLATED 1-1437709-7 (1.50mm²) GOLD PLATED 1-1437709-4 (0.22-0.35mm²) TIN PLATED 1-1437709-5 (0.50-1.00mm²) TIN PLATED 1-1437709-6 (1.50mm²) TIN PLATED	1-1437713-1 (0.22-0.35) BLACK 1-1437713-2 (0.50-1.00) RED 1-1437713-3 (1.50) BLUE	1-1437713-4	2-1437712-9	2 WAY FEMALE CONNECTOR WATERPROOF
7-1437710-0	2 WAY MALE CONNECTOR WITH RETAINER		5.06 gr.	1	1	1											
-	2 WAY MALE CONNECTOR	NO	-	1	1			RED					0-1437709-9 (0.22-0.35mm²) GOLD PLATED 1-1437709-0 (0.50-1.00mm²) GOLD PLATED 1-1437709-7 (1.50mm²) GOLD PLATED 1-1437709-4 (0.22-0.35mm²) TIN PLATED 1-1437709-5 (0.50-1.00mm²) TIN PLATED 1-1437709-6 (1.50mm²) TIN PLATED				2 WAY FEMALE CONNECTOR NON WATERPROOF
7-1437710-1	2 WAY MALE CONNECTOR WITH RETAINER		4.84 gr.	1	1												

PART AS SUPPLIED				COMPONENTS			COLOURS			MATERIALS			SUITABLE FOR			MATING PARTS	
TE PART No.	DESCRIPTION	WATERPROOF	WEIGHT	1 HUOSING	2 SPACER	3 SEAL	1 HOUSING	2 SPACER	3 SEAL	1 HOUSING	2 SPACER	3 SEAL	TERMINAL FEMALE	WIRE SEAL	BLIND PLUG	TE PART No.	DESCRIPTION
5-1437710-9	2 WAY MALE CONNECTOR	YES	4.66 gr.	1	1	1	BLUE	LIGHT BLUE	REDDISH BROWN	PBTP 33% GF	PBTP 33% GF	SILICONE ELASTOMER	0-1437709-9 (0.22-0.35mm²) GOLD PLATED 1-1437709-0 (0.50-1.00mm²) GOLD PLATED 1-1437709-7 (1.50mm²) GOLD PLATED 1-1437709-4 (0.22-0.35mm²) TIN PLATED 1-1437709-5 (0.50-1.00mm²) TIN PLATED 1-1437709-6 (1.50mm²) TIN PLATED	1-1437713-1 (0.22-0.35) BLACK 1-1437713-2 (0.50-1.00) RED 1-1437713-3 (1.50) BLUE	1-1437713-4	2-1437712-6	2 WAY FEMALE CONNECTOR WATERPROOF
6-1437710-0	2 WAY MALE CONNECTOR WITH RETAINER		5.06 gr.	1	1	1											
6-1437710-1	2 WAY MALE CONNECTOR	NO	4.64 gr.	1	1			RED					0-1437709-9 (0.22-0.35mm²) GOLD PLATED 1-1437709-0 (0.50-1.00mm²) GOLD PLATED 1-1437709-7 (1.50mm²) GOLD PLATED 1-1437709-4 (0.22-0.35mm²) TIN PLATED 1-1437709-5 (0.50-1.00mm²) TIN PLATED 1-1437709-6 (1.50mm²) TIN PLATED				2 WAY FEMALE CONNECTOR NON WATERPROOF
6-1437710-2	2 WAY MALE CONNECTOR WITH RETAINER		4.84 gr.	1	1												

PART AS SUPPLIED				COMPONENTS			COLOURS			MATERIALS			SUITABLE FOR			MATING PARTS	
TE PART No.	DESCRIPTION	WATERPROOF	WEIGHT	1 HUOSING	2 SPACER	3 SEAL	1 HOUSING	2 SPACER	3 SEAL	1 HOUSING	2 SPACER	3 SEAL	TERMINAL FEMALE	WIRE SEAL	BLIND PLUG	TE PART No.	DESCRIPTION
6-1437710-3	2 WAY MALE CONNECTOR	YES	4.66 gr.	1	1	1	GRAY	LIGHT BLUE	REDDISH BROWN	PBTP 33% GF	PBTP 33% GF	SILICONE ELASTOMER	0-1437709-9 (0.22-0.35mm²) GOLD PLATED 1-1437709-0 (0.50-1.00mm²) GOLD PLATED 1-1437709-7 (1.50mm²) GOLD PLATED 1-1437709-4 (0.22-0.35mm²) TIN PLATED 1-1437709-5 (0.50-1.00mm²) TIN PLATED 1-1437709-6 (1.50mm²) TIN PLATED	1-1437713-1 (0.22-0.35) BLACK 1-1437713-2 (0.50-1.00) RED 1-1437713-3 (1.50) BLUE	1-1437713-4	2-1437712-7	2 WAY FEMALE CONNECTOR WATERPROOF
6-1437710-4	2 WAY MALE CONNECTOR WITH RETAINER		5.06 gr.	1	1	1											
6-1437710-5	2 WAY MALE CONNECTOR	NO	4.64 gr.	1	1			RED					0-1437709-9 (0.22-0.35mm²) GOLD PLATED 1-1437709-0 (0.50-1.00mm²) GOLD PLATED 1-1437709-7 (1.50mm²) GOLD PLATED 1-1437709-4 (0.22-0.35mm²) TIN PLATED 1-1437709-5 (0.50-1.00mm²) TIN PLATED 1-1437709-6 (1.50mm²) TIN PLATED				2 WAY FEMALE CONNECTOR NON WATERPROOF
-	2 WAY MALE CONNECTOR WITH RETAINER		-	1	1												

PART AS SUPPLIED				COMPONENTS			COLOURS			MATERIALS			SUITABLE FOR			MATING PARTS	
TE PART No.	DESCRIPTION	WATERPROOF	WEIGHT	1 HUOSING	2 SPACER	3 SEAL	1 HOUSING	2 SPACER	3 SEAL	1 HOUSING	2 SPACER	3 SEAL	TERMINAL FEMALE	WIRE SEAL	BLIND PLUG	TE PART No.	DESCRIPTION
7-1437710-2	2 WAY MALE CONNECTOR	YES	4.66 gr.	1	1	1	YELLOW	LIGHT BLUE	REDDISH BROWN	PBTP 33% GF	PBTP 33% GF	SILICONE ELASTOMER	0-1437709-9 (0.22-0.35mm²) GOLD PLATED 1-1437709-0 (0.50-1.00mm²) GOLD PLATED 1-1437709-7 (1.50mm²) GOLD PLATED 1-1437709-4 (0.22-0.35mm²) TIN PLATED 1-1437709-5 (0.50-1.00mm²) TIN PLATED 1-1437709-6 (1.50mm²) TIN PLATED	1-1437713-1 (0.22-0.35) BLACK 1-1437713-2 (0.50-1.00) RED 1-1437713-3 (1.50) BLUE	1-1437713-4	3-1437712-0	2 WAY FEMALE CONNECTOR WATERPROOF
7-1437710-3	2 WAY MALE CONNECTOR WITH RETAINER		5.06 gr.	1	1	1											
7-1437710-4	2 WAY MALE CONNECTOR	NO	4.64 gr.	1	1			RED					0-1437709-9 (0.22-0.35mm²) GOLD PLATED 1-1437709-0 (0.50-1.00mm²) GOLD PLATED 1-1437709-7 (1.50mm²) GOLD PLATED 1-1437709-4 (0.22-0.35mm²) TIN PLATED 1-1437709-5 (0.50-1.00mm²) TIN PLATED 1-1437709-6 (1.50mm²) TIN PLATED				2 WAY FEMALE CONNECTOR NON WATERPROOF
7-1437710-5	2 WAY MALE CONNECTOR WITH RETAINER		4.84 gr.	1	1												

1 HOUSING WITH RETAINER

WATERPROOF / NOT WATERPROOF

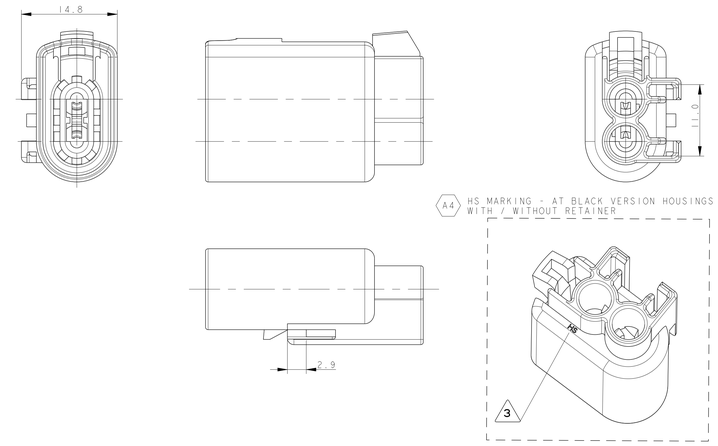

1 HOUSING WITHOUT RETAINER

WATERPROOF / NOT WATERPROOF

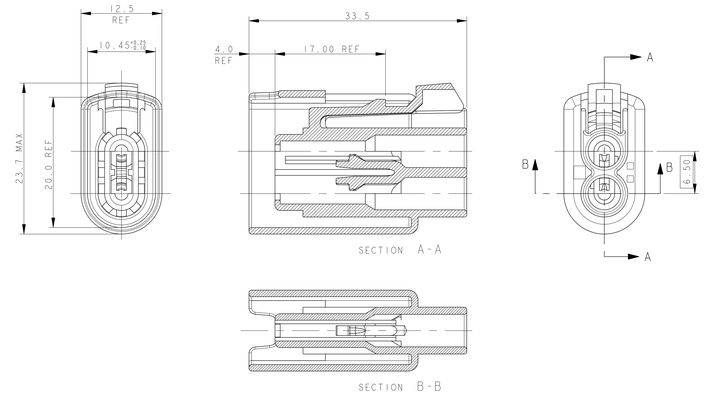

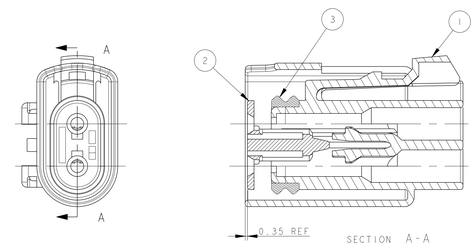

SCALE 4:1

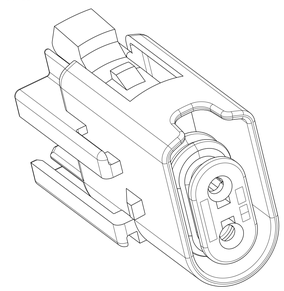

NOTES UNLESS OTHERWISE SPECIFIED:

1) SEE CHART FOR MATING PART NUMBERS.

2) THE CONNECTOR WITH AND WITHOUT RETAINER MOUNTING FEATURE IS DESIGNED TO PASS THROUGH A Ø 24.00mm MIN. HOLE

A4 3 HS MARKING - HIGH SPEED MATERIAL PBT GF 30 IN CASE BLACK HOUSING WITH / WITHOUT RETAINER VERSION ONLY

THIS DRAWING IS A CONTROLLED DOCUMENT.	DWN J. SPINCIC 26MAY2008	TE Connectivity	
DIMENSIONS: mm	CHK R. MARTIN 26MAY2008	NAME 1.6mm SYSTEM 2 WAYS CONNECTOR MALE	
TOLERANCES UNLESS OTHERWISE SPECIFIED: 0 PLC ±- 1 PLC ±0.3 2 PLC ±0.1 3 PLC ±- 4 PLC ±- ANGLES ±1°	APVD A. GENTA 26MAY2008		
	PRODUCT SPEC 108-20269		
	APPLICATION SPEC 411-20111	SIZE A0 CAGE CODE 00779 DRAWING NO C-1418066	RESTRICTED TO -
MATERIAL SEE TABLES	WEIGHT SEE TABLES		
FINISH -	Customer Drawing	SCALE 3:1 SHEET 2 OF 2 REV A5	

THIS DRAWING IS UNPUBLISHED. RELEASED FOR PUBLICATION 2000
© COPYRIGHT 2000 BY - TE Connectivity ALL RIGHTS RESERVED.

REVISIONS					
P	LTR	DESCRIPTION	DATE	DWN	APVD
	-	SEE SHEET 1	-	-	-

A4

2 WAY MALE, BLACK
WATERPROOF VERSION WITH RETAINER

ASSEMBLY	
T&B UNIVERSAL PART No	106049
TE PART No.	△1 0-1437710-8
T&B FORD PART No	NPITA-00R2XX
FORD PART No	91AG-14A464-BBC
TE PART No.	5-1437710-6

△1 OBSOLETE, SUPERSEDED BY 5-1437710-6

2 WAY MALE, NATURAL
WATERPROOF VERSION WITH RETAINER

ASSEMBLY	
T&B UNIVERSAL PART No	106049-N
TE PART No.	△2 1-1437710-0
T&B FORD PART No	NPITA-N0R2XX
FORD PART No	△7 91AG-14A464-BBC
TE PART No.	6-1437710-7

△2 OBSOLETE, SUPERSEDED BY 6-1437710-7

2 WAY MALE, RED
WATERPROOF VERSION WITH RETAINER

ASSEMBLY	
T&B UNIVERSAL PART No	106049-R
TE PART No.	△3 1-1437710-1
T&B FORD PART No	NPITA-R0R2XX
FORD PART No	△7 91AG-14A464-BBC
TE PART No.	7-1437710-0

△3 OBSOLETE, SUPERSEDED BY 7-1437710-0

2 WAY MALE, GREY
WATERPROOF VERSION WITH RETAINER

ASSEMBLY	
T&B UNIVERSAL PART No	106049-G
TE PART No.	6-1437710-4
T&B FORD PART No	NPITA-G0R2XX
FORD PART No	△7 91AG-14A464-BBC
TE PART No.	6-1437710-4

2 WAY MALE, YELLOW
WATERPROOF VERSION WITH RETAINER

ASSEMBLY	
T&B UNIVERSAL PART No	106049-Y
TE PART No.	7-1437710-3
T&B FORD PART No	NPITA-Y0R2XX
FORD PART No	△7 91AG-14A464-BBC
TE PART No.	7-1437710-3

2 WAY MALE, BLUE
WATERPROOF VERSION WITH RETAINER

ASSEMBLY	
T&B UNIVERSAL PART No	106049-D
TE PART No.	△4 0-1437710-9
T&B FORD PART No	NPITA-D0R2XX
FORD PART No	△7 91AG-14A464-BBC
TE PART No.	6-1437710-0

△4 OBSOLETE, SUPERSEDED BY 6-1437710-0

② SPACER

WATERPROOF (LIGHT BLUE)
NOT WATERPROOF (RED)

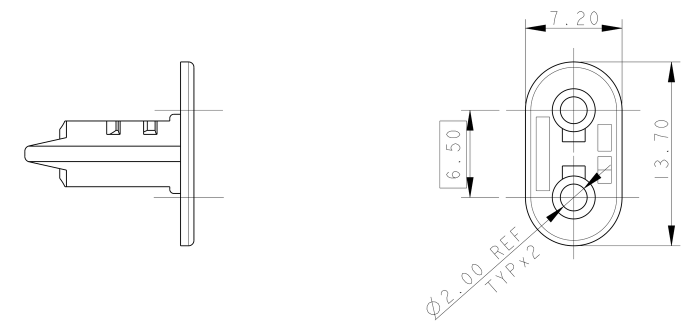

A4

2 WAY MALE, BLACK
WATERPROOF VERSION WITHOUT RETAINER

ASSEMBLY	
T&B UNIVERSAL PART No	106047
TE PART No.	5-1437710-5
T&B FORD PART No	NPITA-0002XX
FORD PART No	89FG-14A464-ABB
TE PART No.	5-1437710-5

2 WAY MALE, NATURAL
WATERPROOF VERSION WITHOUT RETAINER

ASSEMBLY	
T&B UNIVERSAL PART No	106047-N
TE PART No.	6-1437710-6
T&B FORD PART No	NPITA-N002XX
FORD PART No	△7 89FG-14A464-ABB
TE PART No.	6-1437710-6

2 WAY MALE, RED
WATERPROOF VERSION WITHOUT RETAINER

ASSEMBLY	
T&B UNIVERSAL PART No	106047-R
TE PART No.	-
T&B FORD PART No	NPITA-R002XX
FORD PART No	△7 89FG-14A464-ABB
TE PART No.	-

2 WAY MALE, GREY
WATERPROOF VERSION WITHOUT RETAINER

ASSEMBLY	
T&B UNIVERSAL PART No	106047-G
TE PART No.	6-1437710-3
T&B FORD PART No	NPITA-G002XX
FORD PART No	△7 89FG-14A464-ABB
TE PART No.	6-1437710-3

2 WAY MALE, YELLOW
WATERPROOF VERSION WITHOUT RETAINER

ASSEMBLY	
T&B UNIVERSAL PART No	106047-Y
TE PART No.	7-1437710-2
T&B FORD PART No	NPITA-Y002XX
FORD PART No	△7 89FG-14A464-ABB
TE PART No.	7-1437710-2

2 WAY MALE, BLUE
WATERPROOF VERSION WITHOUT RETAINER

ASSEMBLY	
T&B UNIVERSAL PART No	106047-D
TE PART No.	5-1437710-9
T&B FORD PART No	NPITA-D002XX
FORD PART No	△7 89FG-14A464-ABB
TE PART No.	5-1437710-9

③ SEAL

WATERPROOF

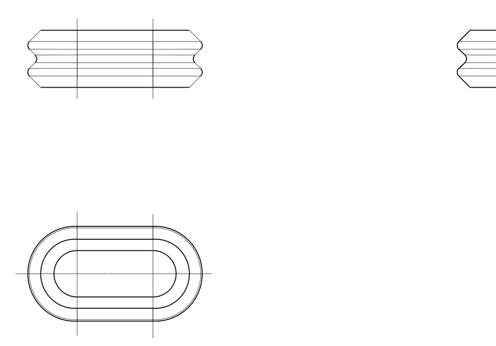

A4

2 WAY MALE, BLACK
NON WATERPROOF VERSION WITH RETAINER

ASSEMBLY	
T&B UNIVERSAL PART No	106050
TE PART No.	△5 1-1437710-2
T&B FORD PART No	NPITA-0AR2XX
FORD PART No	91AG-14489-BBC
TE PART No.	5-1437710-8

△5 OBSOLETE, SUPERSEDED BY 5-1437710-8

2 WAY MALE, NATURAL
NON WATERPROOF VERSION WITH RETAINER

ASSEMBLY	
T&B UNIVERSAL PART No	106050-N
TE PART No.	6-1437710-9
T&B FORD PART No	NPITA-NAR2XX
FORD PART No	△7 91AG-14489-BBC
TE PART No.	6-1437710-9

2 WAY MALE, RED
NON WATERPROOF VERSION WITH RETAINER

ASSEMBLY	
T&B UNIVERSAL PART No	106050-R
TE PART No.	7-1437710-1
T&B FORD PART No	NPITA-RAR2XX
FORD PART No	△7 91AG-14489-BBC
TE PART No.	7-1437710-1

2 WAY MALE, GREY
NON WATERPROOF VERSION WITH RETAINER

ASSEMBLY	
T&B UNIVERSAL PART No	106050-G
TE PART No.	-
T&B FORD PART No	NPITA-GAR2XX
FORD PART No	△7 91AG-14489-BBC
TE PART No.	-

2 WAY MALE, YELLOW
NON WATERPROOF VERSION WITH RETAINER

ASSEMBLY	
T&B UNIVERSAL PART No	106050-Y
TE PART No.	7-1437710-5
T&B FORD PART No	NPITA-YAR2XX
FORD PART No	△7 91AG-14489-BBC
TE PART No.	7-1437710-5

2 WAY MALE, BLUE
NON WATERPROOF VERSION WITH RETAINER

ASSEMBLY	
T&B UNIVERSAL PART No	106050-D
TE PART No.	6-1437710-2
T&B FORD PART No	NPITA-DAR2XX
FORD PART No	△7 91AG-14489-BBC
TE PART No.	6-1437710-2

A4

2 WAY MALE, BLACK
NON WATERPROOF VERSION WITHOUT RETAINER

ASSEMBLY	
T&B UNIVERSAL PART No	106048
TE PART No.	△6 0-1437710-7
T&B FORD PART No	NPITA-0A02XX
FORD PART No	89FG-14489-ABB
TE PART No.	5-1437710-7

△6 OBSOLETE, SUPERSEDED BY 5-1437710-7

2 WAY MALE, NATURAL
NON WATERPROOF VERSION WITHOUT RETAINER

ASSEMBLY	
T&B UNIVERSAL PART No	106048-N
TE PART No.	6-1437710-8
T&B FORD PART No	NPITA-NA02XX
FORD PART No	△7 89FG-14489-ABB
TE PART No.	6-1437710-8

2 WAY MALE, RED
NON WATERPROOF VERSION WITHOUT RETAINER

ASSEMBLY	
T&B UNIVERSAL PART No	106048-R
TE PART No.	-
T&B FORD PART No	NPITA-RA02XX
FORD PART No	△7 89FG-14489-ABB
TE PART No.	-

2 WAY MALE, GREY
NON WATERPROOF VERSION WITHOUT RETAINER

ASSEMBLY	
T&B UNIVERSAL PART No	106048-G
TE PART No.	6-1437710-5
T&B FORD PART No	NPITA-GA02XX
FORD PART No	△7 89FG-14489-ABB
TE PART No.	6-1437710-5

2 WAY MALE, YELLOW
NON WATERPROOF VERSION WITHOUT RETAINER

ASSEMBLY	
T&B UNIVERSAL PART No	106048-Y
TE PART No.	7-1437710-4
T&B FORD PART No	NPITA-YA02XX
FORD PART No	△7 89FG-14489-ABB
TE PART No.	7-1437710-4

2 WAY MALE, BLUE
NON WATERPROOF VERSION WITHOUT RETAINER

ASSEMBLY	
T&B UNIVERSAL PART No	106048-D
TE PART No.	6-1437710-1
T&B FORD PART No	NPITA-DA02XX
FORD PART No	△7 89FG-14489-ABB
TE PART No.	6-1437710-1

2 WAY MALE, GREY
WATERPROOF VERSION WITH EXTENDED SHROUD

ASSEMBLY	
T&B PART No	2450159-001
FORD PART No	△7 98AG-14A464-DBA
TE PART No.	0-1437710-1

△7 IMPORTANT! ADD COLOUR AT ORDERS WITH FORD-PN´s
E.G. 91AG-14A64-BBC RED

5-1437710-5 REV.B	5-1437710-6 REV.B	5-1437710-7 REV.B	5-1437710-8 REV.B	6-1437710-6 REV.A	6-1437710-7 REV.A	6-1437710-8 REV.A	6-1437710-9 REV.A	7-1437710-0 REV.A	7-1437710-1 REV.A	6-1437710-3 REV.A	6-1437710-4 REV.A	6-1437710-5 REV.A	7-1437710-2 REV.A	7-1437710-3 REV.A	7-1437710-4 REV.A	7-1437710-5 REV.A	5-1437710-9 REV.A	6-1437710-0 REV.A	6-1437710-1 REV.A	6-1437710-2 REV.A	0-1437710-1 REV.A	DESCRIPTION	ITEM
	1		1																			HOUSING WITH RETAINER (BLACK)	1
1		1																				HOUSING WITHOUT RETAINER (BLACK)	1
					1		1															HOUSING WITH RETAINER (NATURAL)	1
				1		1																HOUSING WITHOUT RETAINER (NATURAL)	1
								1	1													HOUSING WITH RETAINER (RED)	1
																						HOUSING WITHOUT RETAINER (RED)	1
														1		1						HOUSING WITH RETAINER (YELLOW)	1
													1		1							HOUSING WITHOUT RETAINER (YELLOW)	1
											1											HOUSING WITH RETAINER (GRAY)	1
										1		1										HOUSING WITHOUT RETAINER (GRAY)	1
																		1		1		HOUSING WITH RETAINER (BLUE)	1
																	1		1			HOUSING WITHOUT RETAINER (BLUE)	1
																					1	HOUSING WITH EXTENDED SHROUD WITH RETAINER (GRAY)	1B
		1	1			1	1		1			1			1	1			1	1		SPACER (RED)	2
1	1			1	1			1		1	1		1	1			1	1			1	SPACER (LIGHT BLUE)	2
1	1			1	1			1		1	1		1	1			1	1			1	SEAL (REDDISH BROWN)	3

A4 A4 (beside HOUSING WITH RETAINER (BLACK) and HOUSING WITHOUT RETAINER (BLACK))

A5 A5 A5 A5 (below 5-1437710-5, 5-1437710-6, 5-1437710-7, 5-1437710-8)

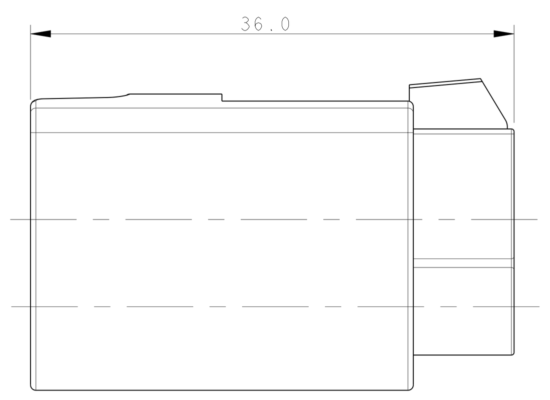

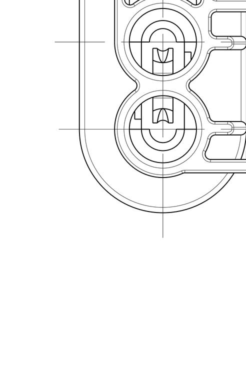

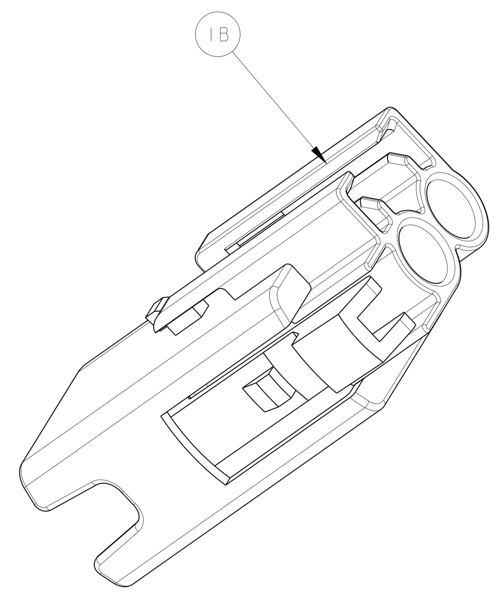

2 WAY MALE, GREY VERSION
P/N 0-1437710-1
WITH EXTENDED SHROUD

PART AS SUPPLIED				COMPONENTS			COLOURS			MATERIALS			SUITABLE FOR		
TE PART No.	DESCRIPTION	WATERPROOF	WEIGHT	1 HUOSING	2 SPACER	3 SEAL	1 HOUSING	2 SPACER	3 SEAL	1 HOUSING	2 SPACER	3 SEAL	TERMINAL FEMALE	WIRE SEAL	BLIND PLUG
-	2 WAY MALE CONNECTOR WITH EXTENDED SHROUD	YES	-	1	1	1	GRAY	LIGHT BLUE	REDDISH BROWN	PBTP 33% GF	PBTP 33% GF	SILICONE ELASTOMER	0-1437709-9 (0.22-0.35mm²) GOLD PLATED 1-1437709-0 (0.50-1.00mm²) GOLD PLATED 1-1437709-7 (1.50mm²) GOLD PLATED 1-1437709-4 (0.22-0.35mm²) TIN PLATED 1-1437709-5 (0.50-1.00mm²) TIN PLATED 1-1437709-6 (1.50mm²) TIN PLATED	1-1437713-1 (0.22-0.35) BLACK 1-1437713-2 (0.50-1.00) RED 1-1437713-3 (1.50) BLUE	1-1437713-4
0-1437710-1	2 WAY MALE CONNECTOR WITH EXTENDED SHROUD WITH RETAINER		5.46 gr.	1	1	1									
-	2 WAY MALE CONNECTOR WITH EXTENDED SHROUD	NO	-	1	1			RED					0-1437709-9 (0.22-0.35mm²) GOLD PLATED 1-1437709-0 (0.50-1.00mm²) GOLD PLATED 1-1437709-7 (1.50mm²) GOLD PLATED 1-1437709-4 (0.22-0.35mm²) TIN PLATED 1-1437709-5 (0.50-1.00mm²) TIN PLATED 1-1437709-6 (1.50mm²) TIN PLATED		
-	2 WAY MALE CONNECTOR WITH EXTENDED SHROUD WITH RETAINER		-	1	1										

MATING PARTS	
TE PART No.	DESCRIPTION
-	2 WAY FEMALE CONNECTOR WATERPROOF
	2 WAY FEMALE CONNECTOR NON WATERPROOF

THIS DRAWING IS A CONTROLLED DOCUMENT.		DWN D. SPINCICH 26MAY2008	TE Connectivity
DIMENSIONS: mm	TOLERANCES UNLESS OTHERWISE SPECIFIED: 0 PLC ±- 1 PLC ±0.3 2 PLC ±0.1 3 PLC ±- 4 PLC ±- ANGLES ±1°	CHK R. MARTINI 26MAY2008	NAME 1.6mm SYSTEM 2 WAYS CONNECTOR MALE
		APVD A. GENTA 26MAY2008	
		PRODUCT SPEC 108-20269	SIZE A0 CAGE CODE 00779 DRAWING NO C-1418066 RESTRICTED TO -
		APPLICATION SPEC 411-20111	
MATERIAL SEE TABLES -	FINISH - -	WEIGHT SEE TABLES	SCALE 3:1 SHEET 2 OF 2 REV A5
		Customer Drawing	

Mouser Electronics

Authorized Distributor

Click to View Pricing, Inventory, Delivery & Lifecycle Information:

TE Connectivity:

6-1437710-9