THIS DRAWING IS UNPUBLISHED. RELEASED FOR PUBLICATION
© COPYRIGHT By – ALL RIGHTS RESERVED.

REVISIONS					
P	LTR	DESCRIPTION	DATE	DWN	APVD
	AA3	REVISED PER ECR-16-005400	9MAY16	N.L	D.Z

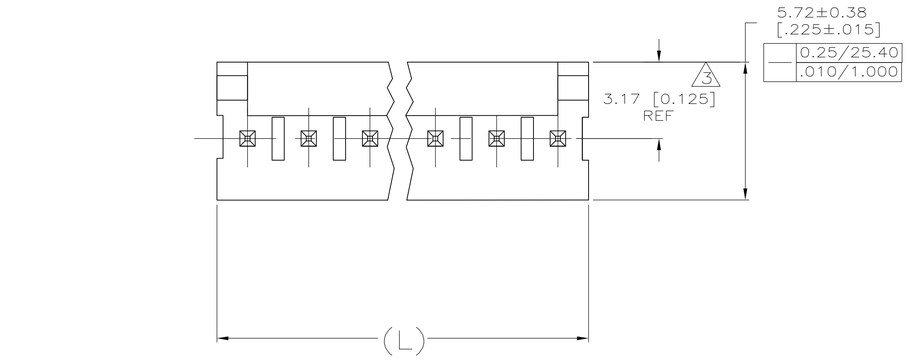

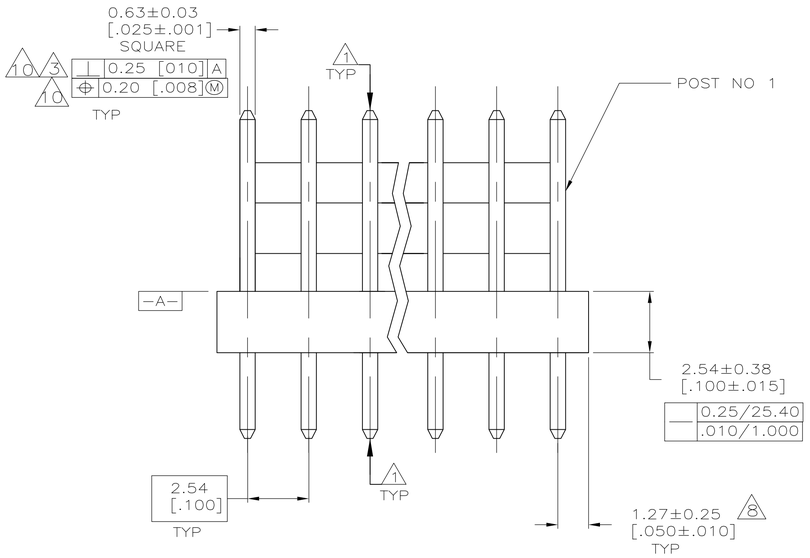

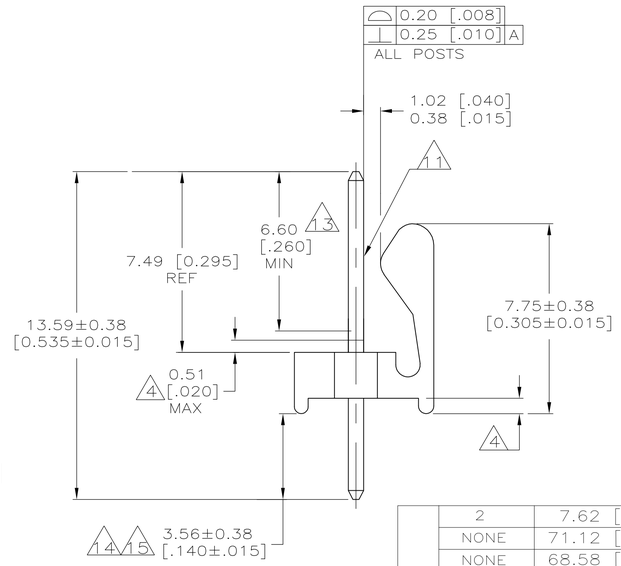

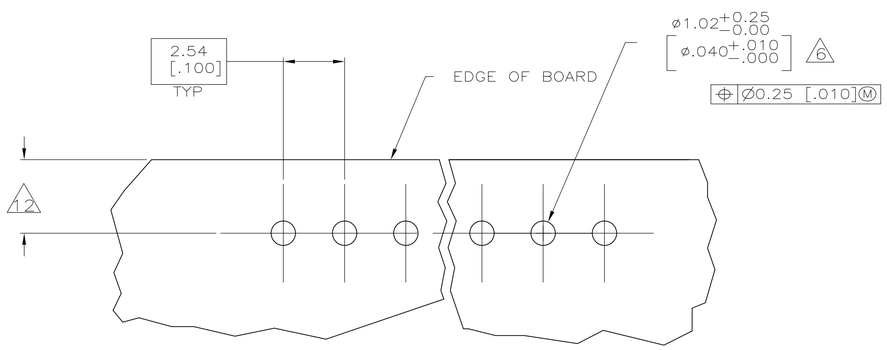

RECOMMENDED MOUNTING HOLE PATTERN
FOR 1.60 [.063] THICK P.C. BOARD 2

1. POST TO WITHSTAND 13 NEWTONS (3 LBS) MINIMUM AXIAL FORCE IN BOTH DIRECTIONS SHOWN WITHOUT DISLODGING.
2. TOLERANCES APPLY TO SOLDER SIDE OF BOARD.
3. MEASURED AT –A–
4. PLASTIC FLASH PERMITTED IN THIS AREA.
5. PARTS COMPLY WITH AMP SOLDERABILITY SPEC. NO. 109-11-2.
6. ONE HOLE MAY BE UNDERSIZED 0.81–0.89 [.032–.035] DIA. FOR ASSEMBLY RETENTION DURING WAVE SOLDERING.
7. MATERIAL: HEADER–THERMOPLASTIC POLYESTER 94V–0 (NATURAL)
   POST–COPPER ALLOY
   FINISH–USE PLATING NOTES 13 & 14 FOR –2 THRU –28 AND NOTES 13 & 15 FOR –32 THRU –58
8. COORDINATE DIMENSION APPLIES FROM CENTER OF ACTUAL FEATURE.
9. PLASTIC BURRS CAUSED BY CUT–OFF TOOLING ARE PERMITTED WITHIN THE MAXIMUM TOLERANCE ENVELOPE.
10. POSTS TO BE MEASURED WHEN STRIP IS HELD FLAT.
11. POST MUST WITHSTAND TWO 90° BENDS AGAINST EXTRUSION WITHOUT BREAKING.
12. DIMENSION SHOULD BE 3.30 [.130] MIN WHEN MATING WITH A MTA–100 CONNECTOR ASSEMBLY OR A CST–100 CONNECTOR ASSEMBLY.
13. PLATING: GOLD PLATE AREA, 0.00038 [.000015] GOLD OR 0.00008 [.000003] MIN GOLD FLASH OVER 0.00030 [.000012] PALLADIUM NICKEL, PER TE CONNECTIVITY'S DISCRETION, ALL SIDES, OVER NICKEL UNDERPLATE, 0.00127 [.000050] MIN, ALL SIDES AND ENTIRE LENGTH OF POST.
14. PLATING: MATTE TIN PLATE AREA, 0.00381–0.00889 [.000150–.000350] THICK, ALL FOUR SIDES 3.56 [.140] MINIMUM.
15. PLATING: MATTE TIN PLATE AREA,0.00381–0.00889 [.000150–.000350] THICK, ALL FOUR SIDES 3.56 [.140] MINIMUM.
16. OBSOLETE PARTS: OBSOLETE CIS STREAMLINING PER D.RENAUD/D.SINISI
17. PRELIMINARY–NOT FOR PRODUCTION.

LEAD FREE

OMITTED POST NO.	DIM (L)	NO.OF POSN	ASSEMBLY
2	7.62 [.300]	3	17 6-641126-3
NONE	71.12 [2.800]	28	5-641126-8
NONE	68.58 [2.700]	27	5-641126-7
NONE	66.04 [2.600]	26	5-641126-6
NONE	63.50 [2.500]	25	5-641126-5
NONE	60.96 [2.400]	24	5-641126-4
NONE	58.42 [2.300]	23	5-641126-3
NONE	55.88 [2.200]	22	5-641126-2
NONE	53.34 [2.100]	21	5-641126-1
NONE	50.80 [2.000]	20	5-641126-0
NONE	48.26 [1.900]	19	4-641126-9
NONE	45.72 [1.800]	18	4-641126-8
NONE	43.18 [1.700]	17	4-641126-7
NONE	40.64 [1.600]	16	4-641126-6
NONE	38.10 [1.500]	15	4-641126-5
NONE	35.56 [1.400]	14	4-641126-4
NONE	33.02 [1.300]	13	4-641126-3
NONE	30.48 [1.200]	12	4-641126-2
NONE	27.94 [1.100]	11	4-641126-1
NONE	25.40 [1.000]	10	4-641126-0
NONE	22.86 [.900]	9	3-641126-9
NONE	20.32 [.800]	8	3-641126-8
NONE	17.78 [.700]	7	3-641126-7
NONE	15.24 [.600]	6	3-641126-6
NONE	12.70 [.500]	5	3-641126-5
NONE	10.16 [.400]	4	3-641126-4
NONE	7.62 [.300]	3	3-641126-3
NONE	5.08 [.200]	2	3-641126-2

LEAD FREE

OMITTED POST NO.	DIM (L)	NO.OF POSN	ASSEMBLY	
NONE	71.12 [2.800]	28	~~2-641126-8~~	SUPERSEDED BY 5-641126-8 16
NONE	68.58 [2.700]	27	~~2-641126-7~~	SUPERSEDED BY 5-641126-7 16
NONE	66.04 [2.600]	26	~~2-641126-6~~	SUPERSEDED BY 5-641126-6 16
NONE	63.50 [2.500]	25	~~2-641126-5~~	SUPERSEDED BY 5-641126-5 16
NONE	60.96 [2.400]	24	2-641126-4	
NONE	58.42 [2.300]	23	~~2-641126-3~~	SUPERSEDED BY 5-641126-3 16
NONE	55.88 [2.200]	22	~~2-641126-2~~	SUPERSEDED BY 5-641126-2 16
NONE	53.34 [2.100]	21	~~2-641126-1~~	SUPERSEDED BY 5-641126-1 16
NONE	50.80 [2.000]	20	2-641126-0	
NONE	48.26 [1.900]	19	~~1-641126-9~~	SUPERSEDED BY 4-641126-9 16
NONE	45.72 [1.800]	18	1-641126-8	
NONE	43.18 [1.700]	17	~~1-641126-7~~	SUPERSEDED BY 4-641126-7 16
NONE	40.64 [1.600]	16	1-641126-6	
NONE	38.10 [1.500]	15	1-641126-5	
NONE	35.56 [1.400]	14	1-641126-4	
NONE	33.02 [1.300]	13	~~1-641126-3~~	SUPERSEDED BY 4-641126-3 16
NONE	30.48 [1.200]	12	1-641126-2	
NONE	27.94 [1.100]	11	1-641126-1	
NONE	25.40 [1.000]	10	1-641126-0	
NONE	22.86 [.900]	9	641126-9	
NONE	20.32 [.800]	8	641126-8	
NONE	17.78 [.700]	7	641126-7	
NONE	15.24 [.600]	6	641126-6	
NONE	12.70 [.500]	5	641126-5	
NONE	10.16 [.400]	4	641126-4	
NONE	7.62 [.300]	3	641126-3	
NONE	5.08 [.200]	2	641126-2	

THIS DRAWING IS A CONTROLLED DOCUMENT.

METRIC

DIMENSIONS: mm [INCHES]

TOLERANCES UNLESS OTHERWISE SPECIFIED:
0 PLC ±
1 PLC ±
2 PLC ± 0.13 [.005]
3 PLC ±
4 PLC ±
ANGLES ±

MATERIAL 7 FINISH 7

DWN	S. HOOVER	26-JAN-2005
CHK	D. BOSSI	26-JAN-2005
APVD	D. BOSSI	26-JAN-2005
PRODUCT SPEC	108-1050	
APPLICATION SPEC	114-1019	
WEIGHT	0	

TE Connectivity

NAME: MTA100 HDR ASSY, FRICTION LOCK, NOTCHED, .025 SQUARE STRAIGHT POST, –

SIZE	CAGE CODE	DRAWING NO	RESTRICTED TO
A1	00779	C-641126	

CUSTOMER DRAWING | SCALE N/A | SHEET 1 OF 1 | REV AA3

4805 (1/15)

Mouser Electronics

Authorized Distributor

Click to View Pricing, Inventory, Delivery & Lifecycle Information:

TE Connectivity:

5-641126-4