THIS DRAWING IS UNPUBLISHED. RELEASED FOR PUBLICATION -.- .
© COPYRIGHT - By - ALL RIGHTS RESERVED.

LOC	DIST
AA	22

REVISIONS

P	LTR	DESCRIPTION	DATE	DWN	APVD
	C2	REVISED PER ECO-11-005033	25MAR11	RK	HMR

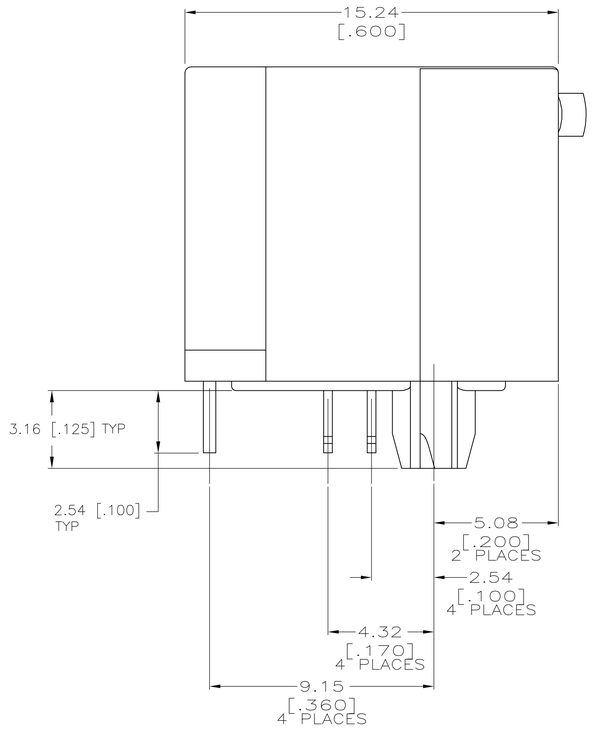

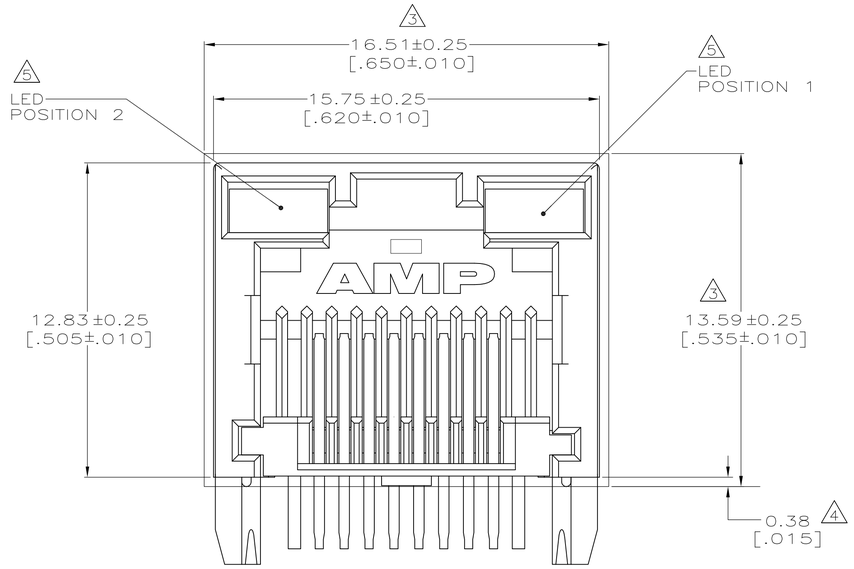

1. MATERIAL:
HOUSING – HIGH TEMPERATURE THERMOPLASTIC, BLACK, UL94V-0.
TERMINALS – 0.36[.014] THICK PHOS BRONZE PLATED WITH 3.81μm[.000150] MINIMUM THICK MATTE TIN IN SOLDER AREA. 1.27μm [.000050] MINIMUM GOLD IN LOCALIZED PLATE AREA. ENTIRE TERMINAL PLATED WITH 1.27μm [.000050] MINIMUM THICK NICKEL.
LIGHT EMITTING DIODE (LED) – DIFFUSED EPOXY LENS, 0.51 x 0.51[.020 x .020] CARBON STEEL WIREFRAME LEADS PREPLATED WITH 8.89 μm[.0003500] THICK Sn/Cu OVER 2.03 μm[.000080] THICK Ag OVER 1.02μm[.000040] THICK Cu OVER 3.56 μm[.000140] THICK Ni OVER 1.02μm[.000040] Cu UNDERPLATE

2. JACK CAVITY CONFORMS TO FCC RULES AND REGULATIIONS PART 68, SUBPART F.

3. SUGGESTED PANEL OPENING DIMENSIONS.

4. SUGGESTED CLEARANCE BETWEEN BOTTOM OF CONNECTOR AND BOTTOM PANEL OPENING.

5. SEE TABLE FOR COLOR OF LEDS AND NUMBER REQUIRED.

6. THIS MODULAR JACK WITH INTEGRATED LED IS NOT IR REFLOW SOLDERING PROCESS COMPATIBLE.

7. OBSOLETE PARTS: OBSOLETE CIS STREAMLINING PER D.RENAUD/D.SINISI

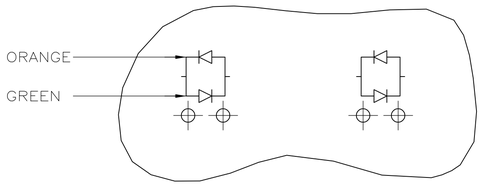

LED CURRENT DIAGRAM
5406533-7 ONLY

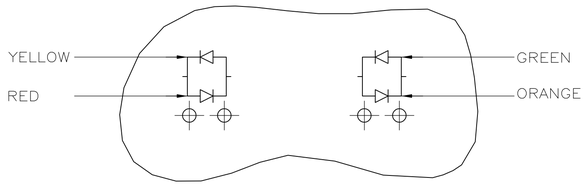

LED CURRENT DIAGRAM
1-5406533-8 ONLY

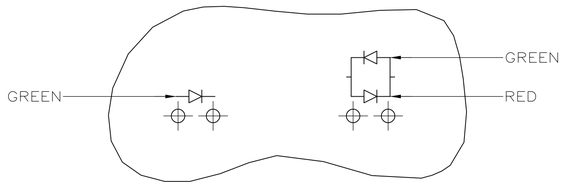

LED CURRENT DIAGRAM
1-5406533-0
PART ONLY

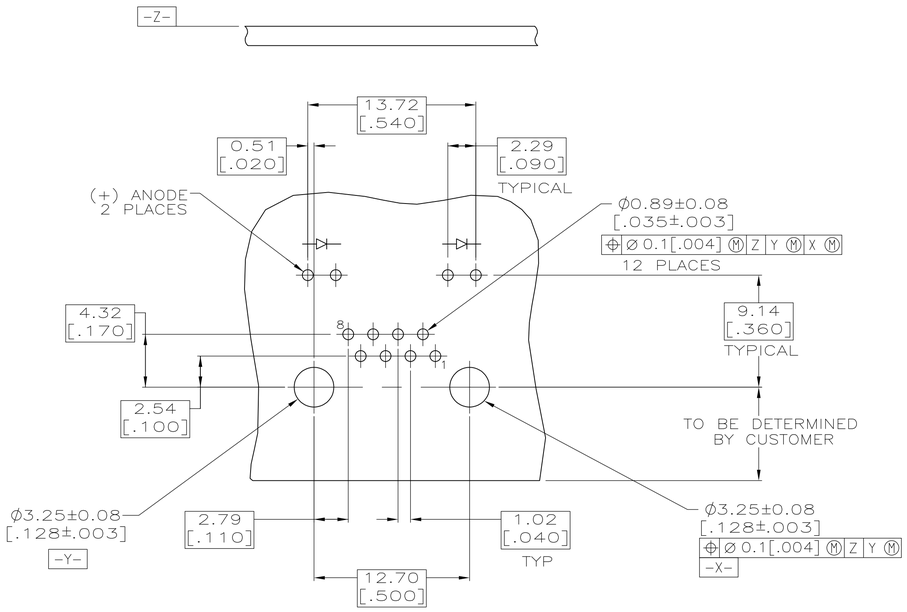

SUGGESTED PRINTED CIRCUIT BOARD LAYOUT
(COMPONENT SIDE)

	TRAY	RED/YELLOW	ORANGE/GREEN	1-5406533-8
OBSOLETE 7	TRAY	GREEN	–	~~1-5406533-7~~
	TRAY	GREEN	RED/GREEN	~~1-5406533-0~~
	TRAY	ORANGE/GREEN	ORANGE/GREEN	5406533-7
7 OBSOLETE	TRAY	YELLOW	YELLOW	~~5406533-6~~
	TRAY	GREEN	GREEN	5406533-5
OBSOLETE 7	TRAY	YELLOW	–	~~5406533-3~~
	TRAY	–	GREEN	~~5406533-2~~
	TRAY	YELLOW	GREEN	5406533-1
PACKAGING		POSITION 2	POSITION 1	PART NUMBER
		INDICATOR COLOR		

THIS DRAWING IS A CONTROLLED DOCUMENT.

DIMENSIONS: mm[INCHES]

TOLERANCES UNLESS OTHERWISE SPECIFIED:
0 PLC ± –
1 PLC ± –
2 PLC ± 0.25[.010]
3 PLC ± 0.13[.005]
4 PLC ± –
ANGLES ± –

MATERIAL: SEE NOTE 1
FINISH: SEE NOTE 1

DWN J. ALCORTA – DOCK5 13JUN2005
CHK J. WESTMAN 13JUN2005
APVD S. FLICKINGER 13JUN2005
PRODUCT SPEC 108-1163-4
APPLICATION SPEC 114-2154
WEIGHT –

TE Connectivity

NAME: INVERTED MODULAR JACK ASSEMBLY, 1X1, LED

SIZE A1 | CAGE CODE 00779 | DRAWING NO C-5406533 | RESTRICTED TO –

CUSTOMER DRAWING | SCALE 8:1 | SHEET 1 OF 1 | REV C2

4805 (3/11)

Mouser Electronics

Authorized Distributor

Click to View Pricing, Inventory, Delivery & Lifecycle Information:

TE Connectivity:

1-5406533-8