THIS DRAWING IS UNPUBLISHED. RELEASED FOR PUBLICATION 20
© COPYRIGHT 20 BY - ALL RIGHTS RESERVED.

REVISIONS

P	LTR	DESCRIPTION	DATE	DWN	APVD
	A	RELEASED	20.DEC.'12	YH	HG
	A1	REVISED (ECR-13-010882)	11.DEC.'13	JM	HG
	A2	REVISED (ECR-14-008729)	05.JUN.'14	JM	HG

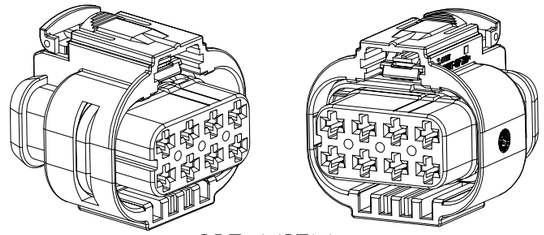

ISO VIEW

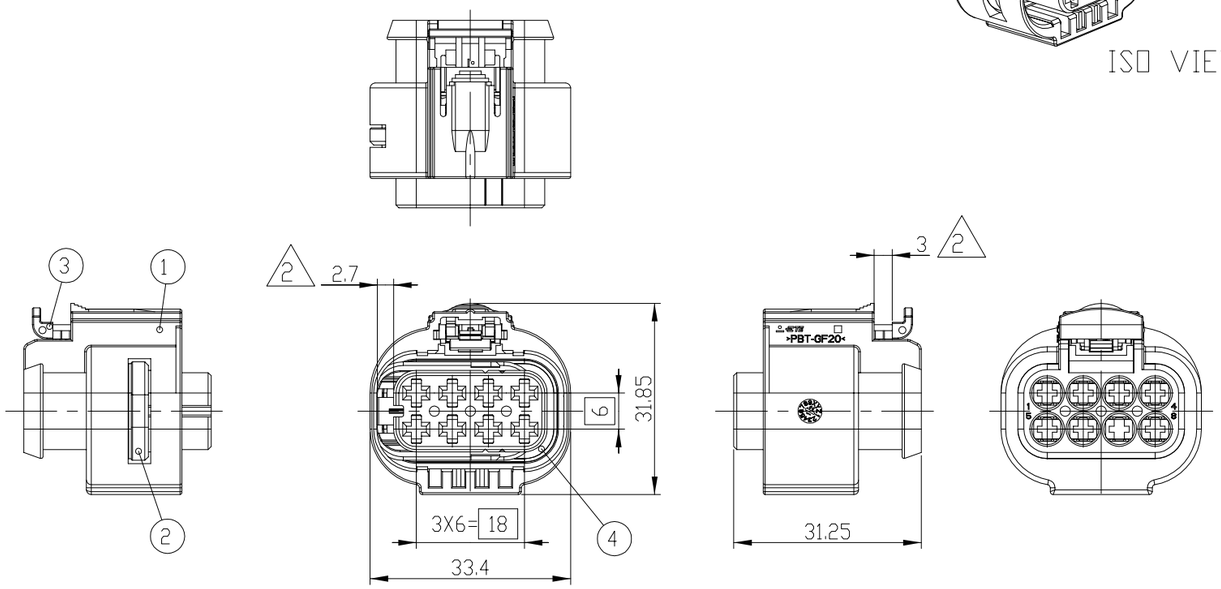

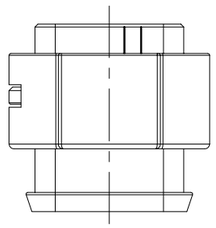

NOTE,
1. GENERAL TOLERANCE : ±0.3, ±3°
2. CONDITION OF DELIVERY : DBL PLATE AND CPA HSG IN OPEN POSITION.
   BUT DBL PLATES OF 9-2109441-2 & 9-2109441-1 POSITION IS CLOSE.
3. CODING
4. APPLIED RECEPTACLE CONTACT P/N:SEE TABLE1
5. MATING PART INTERFACE DRAWING : 114-61047
6. INSTRUCTION SHEET : 411-61012

DESCRIPTION														
CAVITY		ALL CLOSED (41)	4P OPENED (41)	ALL OPENED	6P OPENED (42)	6P OPENED (41)	4P OPENED (41)	ALL OPENED	ALL OPENED	4P OPENED (41)	2P OPENED (41)	ALL OPENED		
CODE		Z	A	D			C		B	A				
REV		A	A	A	A	A	A	A	A	A	A	A	A	A
ASS'Y P/N		9-2109441-1	9-2109441-2	3-2109441-9	3-2109441-8	3-2109441-1	2-2109441-5	2-2109441-4	2-2109441-3	1-2109441-1	0-2109441-4	0-2109441-3	0-2109441-2	
4	RED ORANGE	SILICONE	INNER SEAL		A	1	1	1	1	1	1	1	1	1	1	1	1	1
3	TRAFFIC RED	PBT-GF10	CPA HSG		A			1	1	1	1	1	1	1	1	1	1	1
2	TRAFFIC RED	PBT-GF30	DBL HSG		A	1	1	1	1	1	1	1	1	1	1	1	1	1
1	NATURAL	PBT-GF20	PLUG HSG(CODE Z)	ALL CLOSED	A	1												
	BLACK		PLUG HSG(CODE A)	ALL CLOSED	A		1											
	LIGHT BLUE		PLUG HSG(CODE D)	4P OPENED (41)	A			1										
			PLUG HSG(CODE D)	ALL OPENED	A				1									
			PLUG HSG(CODE D)	6P OPENED (42)	A					1								
	LIGHT GRAY		PLUG HSG(CODE C)	6P OPENED (41)	A						1							
			PLUG HSG(CODE C)	4P OPENED (41)	A							1						
			PLUG HSG(CODE C)	ALL OPENED	A								1					
	NATURAL		PLUG HSG(CODE B)	ALL OPENED	A									1				
	BLACK		PLUG HSG(CODE A)	4P OPENED (41)	A										1			
			PLUG HSG(CODE A)	2P OPENED (41)	A											1		
			PLUG HSG(CODE A)	ALL OPENED	A													1
NO	FINISH/ COLOR	MATERIAL	CODE / DESCRIPTION	CAVITY	REV	Q'TY												

4 TABLE 1

CONTACT NAME	WIRE SIZE RANGE(mm^2)	DIAMETER OF INSULATION (mm)	P/N	WIRE SEAL	CAVITY PLUG
MCP 2.8	0.35	Ø1.2~ Ø1.4	968882	828904-1	828922-1
	0.5~1.0	Ø1.4~ Ø2.1	968855		
	1.5~2.5	Ø2.2~ Ø3.0	968857	828905-1	

THIS DRAWING IS A CONTROLLED DOCUMENT.

DIMENSIONS: mm

TOLERANCES UNLESS OTHERWISE SPECIFIED: 0 PLC ±, 1 PLC ±, 2 PLC ±, 3 PLC ±, 4 PLC ±, ANGLES ± — SEE NOTE

3rd ANGLE PROJECTION

MATERIAL: SEE TABLE

FINISH: –

DWN JM JEON
CHK JW JUNG
APVD HG CHO
PRODUCT SPEC –
APPLICATION SPEC –
WEIGHT –

TE Connectivity

NAME: MCP 2.8mm 8P PLUG ASS'Y

SIZE A3 | CAGE CODE 00779 | DRAWING NO C-2109441 | RESTRICTED TO –

CUSTOMER DRAWING | SCALE 1:1 | SHEET 1 OF 2 | REV A2

THIS DRAWING IS UNPUBLISHED. RELEASED FOR PUBLICATION 20
© COPYRIGHT 20 BY - ALL RIGHTS RESERVED.

REVISIONS

P	LTR	DESCRIPTION	DATE	DWN	APVD
	-	SEE SHEET 1	-	-	-

3 CODING

CODING "A"	CODING "B"	CODING "C"	CODING "D"	CODING "Z"
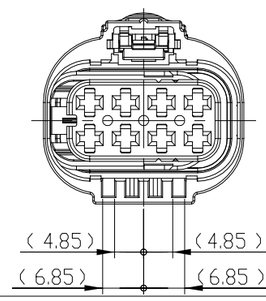	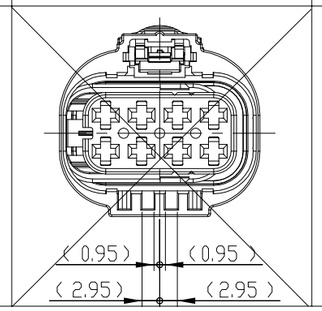	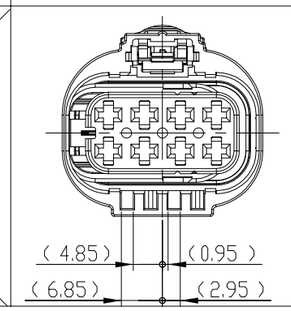	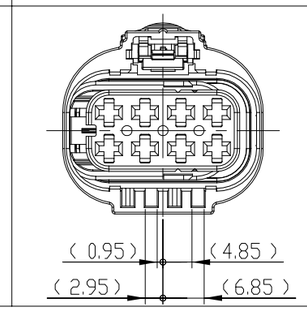	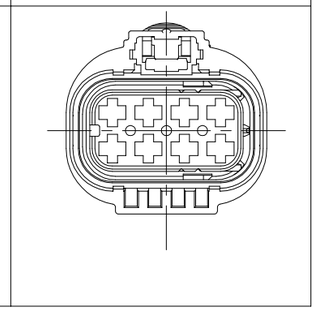

41 CIRCUIT ARRANGEMENT FOR PARTICULAR TYPE

0-2109441-3	0-2109441-4	2-2109441-4	2-2109441-5
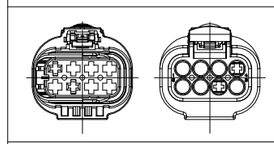	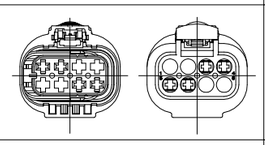	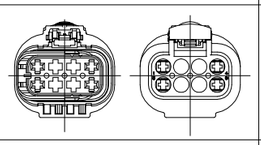	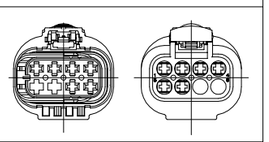
42 3-2109441-1	3-2109441-9	9-2109441-1	9-2109441-2
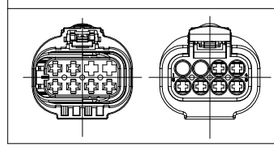	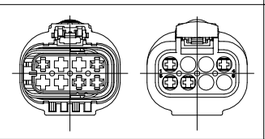	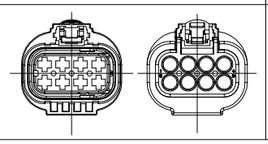	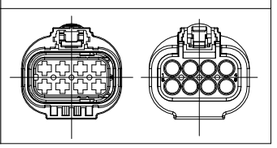

41 <CIRCUIT ARRANGEMENT INDICATES UNAVAILABLE (BLOCKED) CIRCUIT>

CAVITY	CODE	P/N	1	2	3	4	5	6	7	8	REV
ALL CLOSED	CODING "Z"	9-2109441-1	X	X	X	X	X	X	X	X	A
	CODING "A"	9-2109441-2	X	X	X	X	X	X	X	X	A
4P OPENED	CODING "D"	3-2109441-9	○	X	X	○	○	○	X	X	A
ALL OPEN		3-2109441-8	○	○	○	○	○	○	○	○	A
42 6P OPENED		3-2109441-1	X	X	○	○	○	○	○	○	A
6P OPENED	CODING "C"	2-2109441-5	○	○	○	○	○	○	X	X	A
4P OPENED		2-2109441-4	○	X	X	○	○	X	X	○	A
ALL OPEN		2-2109441-3	○	○	○	○	○	○	○	○	A
ALL OPEN	CODING "B"	1-2109441-1	○	○	○	○	○	○	○	○	A
4P OPENED	CODING "A"	0-2109441-4	X	X	○	○	○	○	X	X	A
2P OPENED		0-2109441-3	X	X	X	○	X	X	○	X	A
ALL OPEN		0-2109441-2	○	○	○	○	○	○	○	○	A

CIRCUIT ARRANGEMENT INDICATES UNAVAILABLE (BLOCKED) CIRCUIT

THIS DRAWING IS A CONTROLLED DOCUMENT.

DIMENSIONS: mm

TOLERANCES UNLESS OTHERWISE SPECIFIED:
0 PLC ±
1 PLC ±
2 PLC ±
3 PLC ±
4 PLC ±
ANGLES ±

MATERIAL: SEE TABLE SHEET 1

FINISH: -

DWN
CHK
APVD SEE SHEET 1 OF 2
PRODUCT SPEC: -
APPLICATION SPEC: -
WEIGHT: -

TE Connectivity

NAME: MCP 2.8mm 8P PLUG ASS'Y

SIZE	CAGE CODE	DRAWING NO	RESTRICTED TO
A3	-	C-2109441	-

CUSTOMER DRAWING | SCALE 1:2 | SHEET 2 OF 2 | REV A2

Mouser Electronics

Authorized Distributor

Click to View Pricing, Inventory, Delivery & Lifecycle Information:

TE Connectivity:

2-2109441-3