DRAWING MADE IN THIRD ANGLE PROJECTION

/home/us012285/dmtecmod

PART NUMBER	REV	FIRST USED
1852150-1	A	122500-1
1852150-2	A	565435-5
1852150-3	A	354500-1

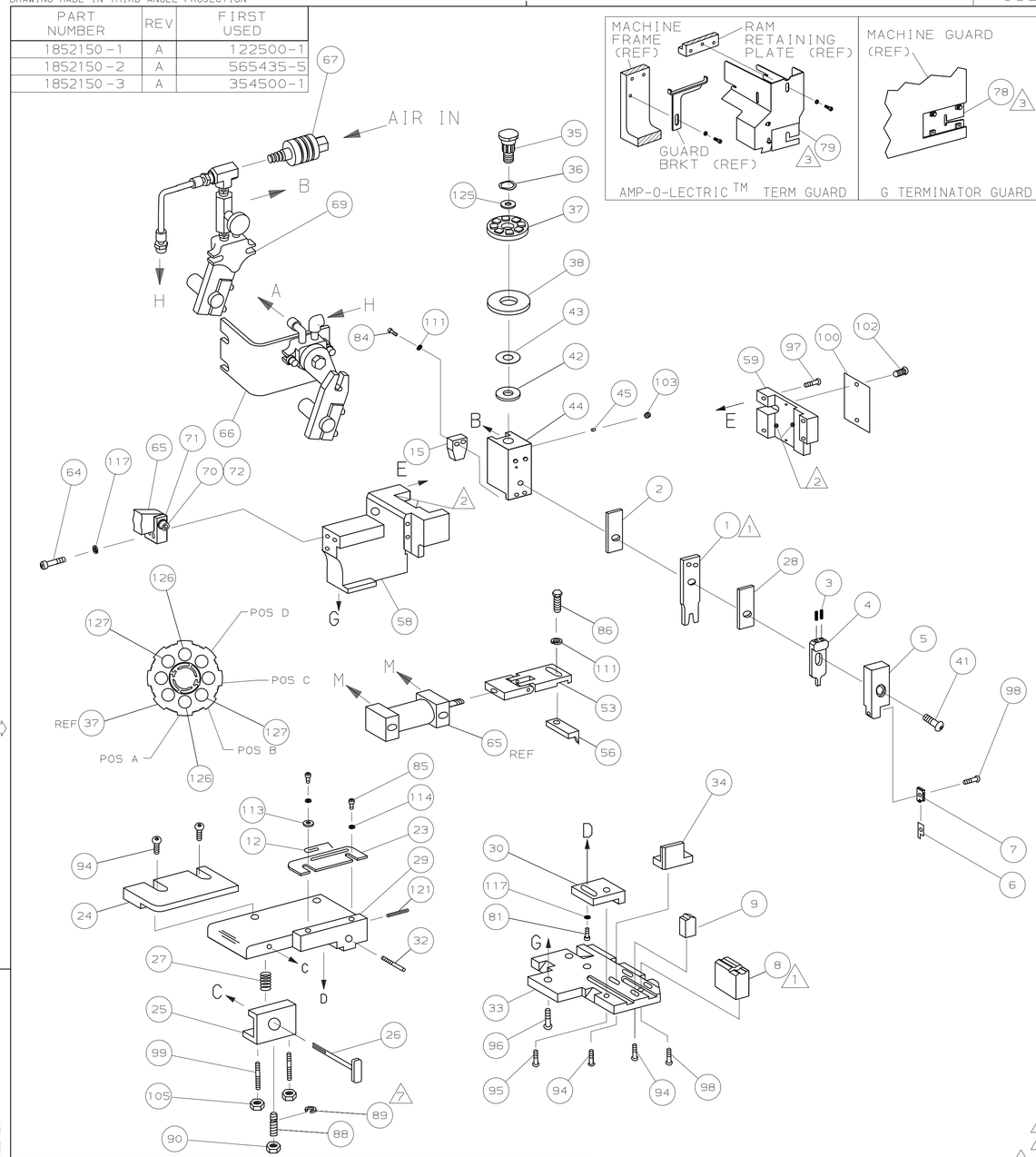

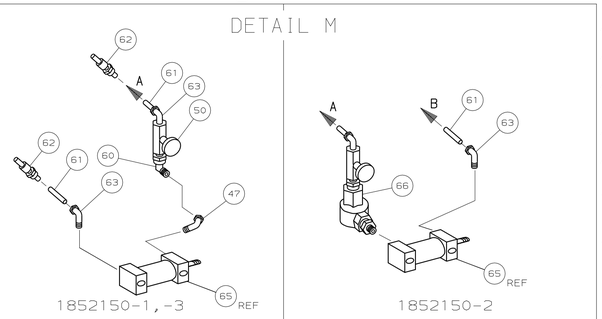

1. RECOMMENDED SPARE PARTS.
2. GREASE LIGHTLY.
3. GUARD MUST BE IN PLACE WHEN OPERATING APPLICATOR IN A BENCH MACHINE.
4. SEE DRAWING FOR COMPONENTS.
5. ITEM NOT SHOWN ON ASSEMBLY.
6. CRIMP HEIGHT FOR TERMINAL 1241002-1 INSULATION ø.110 MAX.
7. THREAD ITEM 88 INTO ITEM 25 AND INSERT ITEM 89 ONTO ITEM 88.

TERMINAL NAME: TUBULAR END-SLEEVE W/PLASTIC SLEEVE

966385
966902
1241002
-

CRIMPING DATA

PAD LTR	CRIMP HEIGHT	WIRE SIZE
A	.038 ±.002[0.97 ±0.05mm]	1.0mm²
B	.035 ±.002[0.89 ±0.05mm]	18 (6)
C	NOT	USED
D	NOT	USED

CRIMP	SIZE	TYPE	RANGE
WIRE	.070 [1.78mm]	F	18 OR 1.0mm²
INSUL	-	-	ø.090 MAX

WIRE STRIP LENGTH	TERM APPL SPEC	FEED	APPL INSTRUCTION	SET UP GAGE	LAYOUT
5mm	NONE	4.2mm	408-8040	458637-1	L2651

-3	-2	-1	U/M	DWG SIZE	PART NO	DESCRIPTION	ITEM NO
							129
							128
2	2	2	-	C	1-354779-6	PIN, WIRE DISC (.3070)B	127
2	2	2	-	C	1-354779-2	PIN, WIRE DISC (.3050)A	126
1	1	1	-	A	986950-1	WASHER, FLAT PRECISION	125
1	1	1	-	A	217238-1	GENERAL INSTRUCTION PACKAGE	124
1	1	1	-	-	4088040	SF APPL INST 408-8040	123
							122
1	1	1	-	A	4-21028-0	PIN,SLT SPR(ø.093x.75)ST GDE PL	121
							120
							119
							118
3	3	3	-	A	21024-5	WASHER, LOCK(#10)ADJ BLOCK	117
							116
							115
2	2	2	-	A	21024-2	WASHER,LOCK(#4)FRONT STP GUIDE	114
1	1	1	-	A	21055-4	WASHER,FLAT(#4)FRONT STP GUIDE	113
							112
3	3	3	-	A	21024-4	WASHER,LOCK(#8)	111
							110
							109
							108
							107
							106
2	2	2	-	A	21021-4	NUT, SELF LOCK(10-32)DRAG	105
							104
1	1	1	-	A	21009-2	SCR,SKT SET(1/4-20x.25 LW)RAM	103
2	2	2	-	A	21017-2	SCR,DRIVE(#2x.19)ID PLATE	102
							101
1	1	1	-	B	461264-1	PLATE, IDENTIFICATION	100
2	2	2	-	A	5-21006-9	STUD (10-32x1.25) DRAG	99
2	2	2	-	A	22733-8	SCR,BHC(8-32x.38 LW)ANVIL	98
4	4	4	-	A	2-21002-9	SCR,BHC(10-32x.75)CAP	97
3	3	3	-	A	2-22733-8	SCR,BHC(1/4-20x.62)HSG	96
1	1	1	-	A	2-21002-7	SCR,BHC(10-32x.50)SG ADJ BLK	95
6	6	6	-	A	2-21002-2	SCR,BHC(8-32x.50)TERM H DWN	94
							93
							92
							91
1	1	1	-	A	22202-1	NUT, JAM, 1/4-20	90
1	1	1	-	A	1-21986-3	CLIP, E-RING	89
1	1	1	-	A	1490895-1	SCR,SKT SET(1/4-20x.75)MOD	88
							87
1	1	1	-	A	2-22603-1	SCR,HEX HD(8-32x.38)FEED FINGER	86
2	2	2	-	A	1-21000-4	SCR,SHC(4-40x.38)F ST GUIDE	85
2	2	2	-	A	2-21000-6	SCR,SHC(8-32x.38)HOLD DOWN	84
							83
							82
1	1	1	-	A	3-21000-4	SCR,SHC(10-32x.38)SG ADJ BL	81
							80
-	1	-	-	B	462992-7	GUARD ASSY	79
REF	-	-	-	B	679532-1	INSERT, GUARD	78
-	-	1	-	A2	662516-4	WIRE FUNNEL ASSEMBLY	77
							76
							75
							74
							73
1	1	1	-	A	3-21000-5	SCR,SHC(3/8-16x1.00)	72
1	1	1	-	B	459610-3	MOUNT, FEED BRACKET	71

QTY REQD PER ASSY — PARTS LIST

-1	-2	-3	U/M	DWG SIZE	PART NO	DESCRIPTION	ITEM NO
LEADMAKER	BENCH MODEL K	BENCH MODEL G			AIR FEED	AIR FEED	AIR FEED
1	1	1	-	A	21024-8	WASHER, LOCK(3/8)	70
-	1	-	-	C	455350-1	AIR BLAST ASSY	69
							68
-	1	-	-	A	24042-2	VALVE, SHUT OFF	67
-	1	-	-	C	692655-1	AIR FEED VALVE ASSY	66
1	1	1	-	C	461065-4	AIR FEED ASSY (1 INCH)	65
2	2	2	-	A	3-21000-9	SCR,SHC(10-32x1.00)AIR ASSY	64
2	-	2	-	A	980285-2	ELBOW, 1/8 NPT - 1/4 T	63
2	-	2	-	A	23238-1	QUICK DISCONNECT	62
42.00	21.00	42.00	IN	A	27319-4	TUBING, POLY-FLO ø.25	61
1	1	1	-	A	22306-3	ELBOW, SWIVEL 1/8 NPT - 1/4 T	60
1	1	1	-	C	454220-1	CAP, RAM	59
1	1	1	-	D	454485-1	HOUSING	58
							57
1	1	1	-	B	690542-2	PAWL, FEED	56
							55
							54
1	1	1	-	B	461062-1	FEED FINGER ASSY	53
							52
							51
1	REF	1	-	A	23054-1	VALVE, FLOW CONTROL	50
							49
							48
1	REF	1	-	A	22304-1	NIPPLE, HEX 1/8 NPT	47
							46
1	1	1	-	A	690191-1	PLUG, NYLON	45
1	1	1	-	C	455673-2	RAM	44
1	1	1	-	A	690125-1	WASHER, LAMINATED	43
1	1	1	-	A	690124-1	WASHER, RAM	42
1	1	1	-	A	7-21002-9	BOLT, CRIMPER(5/16x1.00)	41
							40
							39
1	1	1	-	A	690223-2	SPACER, INSULATION DISC	38
1	1	1	-	D	354777-1	WIRE DISC	37
1	1	1	-	A	22480-5	WASHER, SPRING	36
1	1	1	-	B	690212-1	POST, RAM	35
1	1	1	-	B	2-690786-5	SUPPORT, TERMINAL	34
1	1	1	-	D	1-455675-0	PLATE, BASE	33
1	1	1	-	A	690432-3	SCREW, ADJUSTMENT	32
							31
1	1	1	-	B	455689-1	BLOCK, STRIP GUIDE ADJ	30
1	1	1	-	C	356724-1	PLATE, STRIP GUIDE	29
1	1	1	-	C	1-455888-8	SPACER, CRIMPER	28
1	1	1	-	A	22282-1	SPRING, DRAG	27
1	1	1	-	B	454175-2	LEVER, DRAG RELEASE	26
1	1	1	-	B	662151-1	DRAG	25
1	1	1	-	D	2-690440-7	GUIDE, STRIP (REAR)	24
1	1	1	-	A	1-690487-3	GUIDE, STRIP (FRONT)	23
							22
							21
							20
							19
							18
							17
							16
1	1	1	-	A	3-690518-2	DEPRESSOR, SHEAR (REAR)	15
							14
							13
1	1	1	-	A	356753-1	SPRING, ANTI BACK-UP	12
							11
							10
1	1	1	-	C	662150-2	RAMP	9
1	1	1	-	C	1633019-1	ANVIL	8
1	1	1	-	A3	662508-1	HOLDER, BLADE	7
1	1	1	-	C	662115-1	BLADE, SHEAR	6
1	1	1	-	C	662113-2	CAP, DEPRESSOR	5
1	1	1	-	C	662114-2	DEPRESSOR, TERMINAL	4
2	2	2	-	C	22278-7	SPRING	3
1	1	1	-	C	1-455888-4	SPACER, CRIMPER	2
1	1	1	-	C	1-462808-4	CRIMPER, WIRE	1

QTY REQD PER ASSY — PARTS LIST

REVISION OF EACH ASSY NO (WHEN BLANK, USE DWG REVISION)

P	F	LTR	REVISION RECORD	APP	DATE
		A	RELEASED	TE	JAN06

DIMENSIONS IN INCHES.
DO NOT SCALE PRINT.
TOLERANCES UNLESS OTHERWISE SPECIFIED:
2 PLC DEC ±.25
3 PLC DEC ±-
4 PLC DEC ±-
ANGLES ± -
SURF TEXTURE: √
REMOVE BURRS, BREAK SHARP EDGES R.015 MAX

MATL - HT TR - FIN -

DR 23NOV05 R.O.WILSON APP 30NOV05 T ELBIN
CHK 23NOV05 R.O.WILSON REL -

AMP Incorporated Harrisburg, PA 17105-3608

NAME SIDE FEED HDM APPLICATOR — MACHINE REF MINI APPL

SCALE - D DWG NO 1852150 SHEET 1 OF 1 REV A

CAGE CODE 00779 — CUSTOMER AND ASSEMBLY DRAWING — RESTRICTED TO

THIS DRAWING IS A CONTROLLED DOCUMENT.
RELEASED FOR PUBLICATION 23NOV99
BY AMP INCORPORATED. ALL RIGHTS RESERVED.
© COPYRIGHT 1999

LOC A DIST 66

AMP 1756 REV 3-92 09-JAN-06 14:28:11 us012285

8 7 6 5 4 3

Mouser Electronics

Authorized Distributor

Click to View Pricing, Inventory, Delivery & Lifecycle Information:

TE Connectivity:

1852150-2