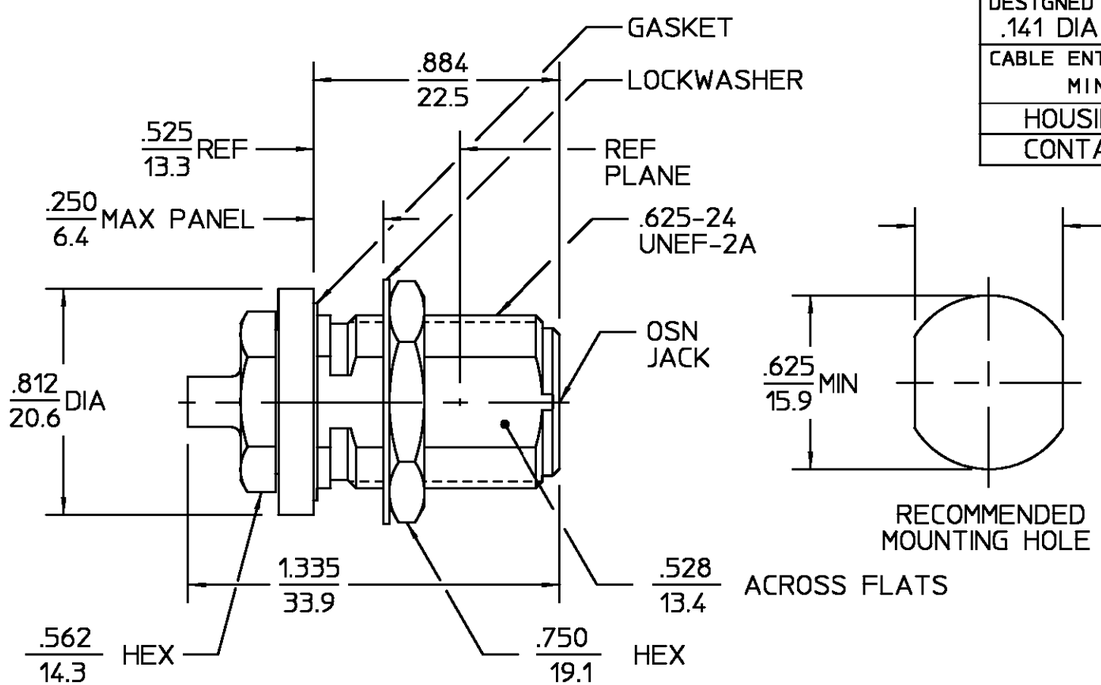

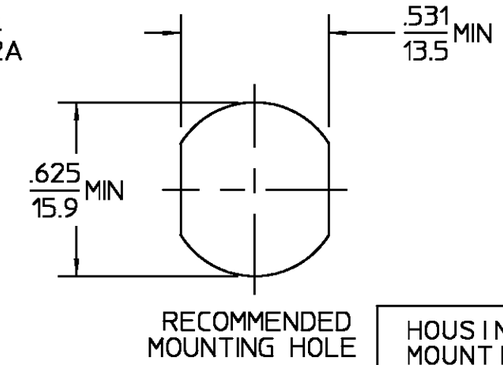

DESIGNED FOR USE WITH .141 DIA S/R CABLE	
CABLE ENTRY DIAMETER MINIMUM	
HOUSING	.142
CONTACT	.0404

REVISIONS

REV	DESCRIPTION	DATE	APPROVED
04_0	REVISED	2/6/97	2/6/97

ELECTRICAL	MECHANICAL	ENVIRONMENTAL
Nominal Impedance (Ohms) 50	Interface Dimensions MIL-STD-348A, Fig. 304.2	Temperature Rating -65°C to +105°C
Frequency Range (GHz) DC to 11	Recommended Mating Torque 12-15 In Lbs	Vibration MIL-STD-1344, Method 2005, Condition IV, 30g Peak
Volt Rating (VRMS MAX) @ Sea Level 600	Mating Characteristics: Insertion (MAX Lbs) 2.0	Shock MIL-STD-1344, Method 2004, Condition G
VSWR 1.15 + .012(f)GHz	Withdrawal (MIN Oz) 2.0	Thermal Shock MIL-STD-1344, Method 1003, Condition A, Except High Temp 115°C
Insertion Loss (dB MAX) $.03\sqrt{(f)}$GHz	Force to Engage and Disengage (In/Lbs MAX) 6.0	Corrosion - MIL-STD-1344, Method 1001, Condition B
RF Leakage (dB MIN) -90dB Min between 2 to 3GHz	Center Contact Captivation Axial (Lbs) 6.0	
Corona, 70,000 Ft (VRMS MIN) 375	Radial (In/Oz) N/A	
Dielectric Withstanding Voltage (VRMS MIN) @ Sea Level 1500	Cable Retention Axial Force (Lbs) 60 Lbs Min	
Contact Resistance (Milliohms MAX) Center Contact 1.5	Torque (In/Oz) 55 In Oz Min	
Outer Contact 2.0	Weight (Grams) TBD	
RF High Potential @ Sea Level (VRMS MIN @ 5 MHz) 1000		
I.R.(Megohms MIN) 5000		

COMPONENT	MATERIAL	FINISH
HOUSING MOUNTING NUT LOCKWASHER	STAINLESS STEEL PER ASTM-A484 AND ASTM-A582, TYPE 303	GOLD PLATE PER MIL-G-45204
HOUSING	BRASS PER QQ-B-626 COMP. 360	GOLD PLATE PER MIL-G-45204
DIELECTRIC	TFE FLUOROCARBON PER ASTM-D-1457	N/A
CENTER CONTACT	BERYLLIUM COPPER PER ASTM B 196, ALLOY C17300, CONDITION H	GOLD PLATE PER MIL-G-45204
GASKET	SILICONE RUBBER PER ZZ-R-765	N/A
"O" - RING	SILICONE RUBBER PER ZZ-R-765, CLASS 2B	N/A

UNLESS OTHERWISE SPECIFIED DIMENSIONS ARE IN INCHES
TOLERANCE ON
FRAC. ± 1/64 DEC. ±.005 ANGLES ± 1°

DRAWN BY KL DATE 4/20/71
CHECKED BY
APP'D BY BWC 4/20/71

AMP

AMP Incorporated
140 Fourth Avenue
Waltham, MA 02451-7599

These drawings and specifications are the property of M/A-COM Incorporated and shall not be reproduced or copied or used in whole or in part as the basis for the manufacture or sale of item(s) without written permission.

USE ASS'Y PROCEDURE

408-04911
NO. A.P. (30-005)

TITLE OSN BULKHEAD FEEDTHROUGH CABLE JACK-DIRECT SOLDER ATTACHMENT

SIZE	CODE IDENT NO.		REV
B	26805	3004-7941-01	04_0
SCALE 2:1			SHEET 1 OF 1

CUSTOMER DRAWING

AMP PART # 1057160-1
SHEET 1 OF 1 REV A

Mouser Electronics

Authorized Distributor

Click to View Pricing, Inventory, Delivery & Lifecycle Information:

TE Connectivity:

1057160-1