THIS DRAWING IS UNPUBLISHED. RELEASED FOR PUBLICATION 2006
© COPYRIGHT 2006 ALL RIGHTS RESERVED.

LOC	DIST
A1	-

REVISIONS

P	LTR	DESCRIPTION	DATE	DWN	APVD
	A3	new pro/E drawing ECR-08-022186	09JAN2009	SR	AR
	A4	ECR-15-000844	29JAN2015	GSK	MKO

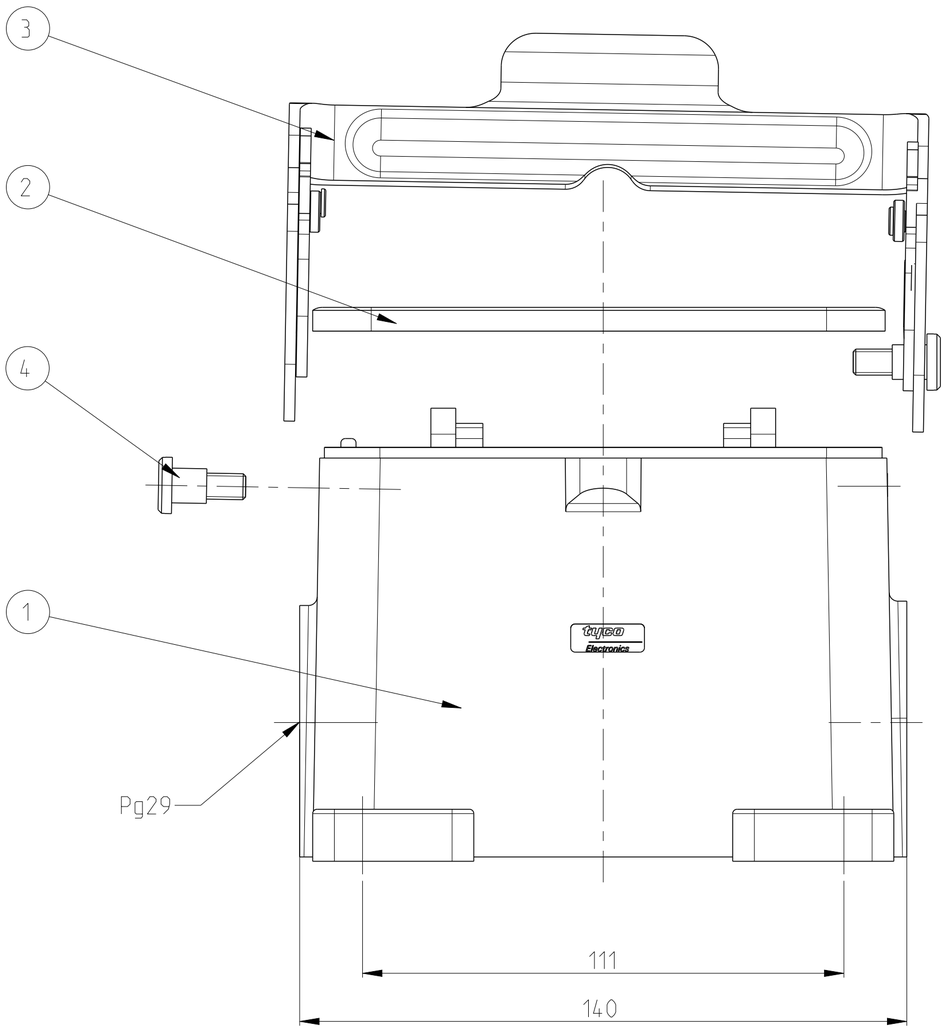

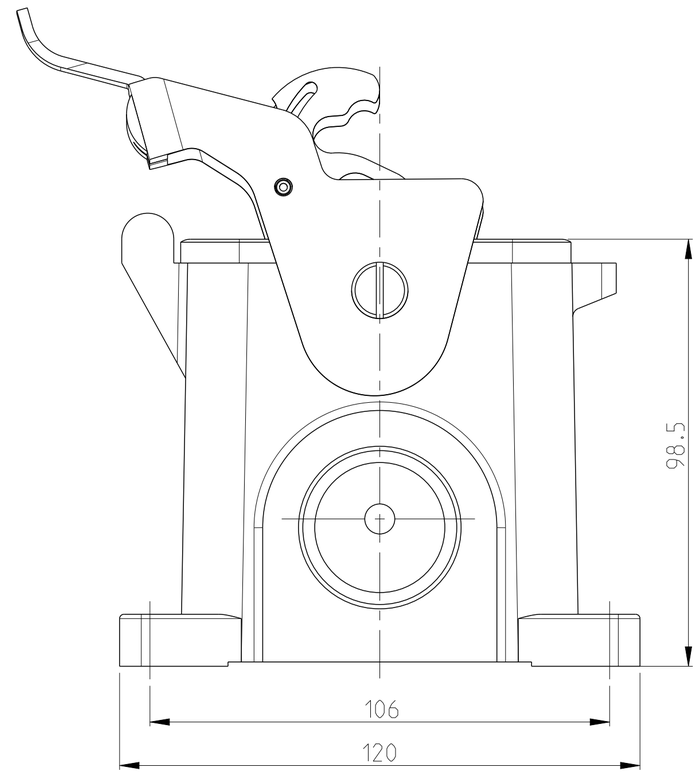

NOTES

1 PART SHALL BE FREE AND CLEAN OF BURRS AND OTHER FOREIGN MATERIAL

2 PACKAGING: QUANTITY 2 PIECES

3 VARNISHING INSIDE HOUSING NOT REQUIRED

2	SCREW SLOTTED PAN HEAD	STAINLESS STEEL	BLANC		4	M6X8
1	SIDE CLIP	STEEL	ZINC PLATED	BLUE	3	
1	PROFIL SEAL	NEOPRENE		BLACK	2	
1	SURFACE MOUNTED HOUSING SIDE ENTRY	ALU		GREY	1	
1-2	DESCRIPTION	MATERIAL	SURFACE	COLOR	ITEM	NOTES

HB.48.SG-LB.1.29.Z

THIS DRAWING IS A CONTROLLED DOCUMENT.

DIMENSIONS: mm

TOLERANCES UNLESS OTHERWISE SPECIFIED:
0 PLC ±-
1 PLC ±-
2 PLC ±-
3 PLC ±-
4 PLC ±-
ANGLES ±1°

MATERIAL -

FINISH -

DWN R.SCHNEIDER 09JAN2009
CHK T.SCHNURPFEIL 09JAN2009
APVD -
PRODUCT SPEC -
APPLICATION SPEC -
WEIGHT -

TE Connectivity

NAME SURFACE MOUNTED HOUSING SIDE ENTRY HB.48.SG-LB.1.29.Z -

SIZE	CAGE CODE	DRAWING NO	RESTRICTED TO
A2	00779	C-1102391	-

CUSTOMER DRAWING | SCALE 1:1 | SHEET 1 OF 1 | REV A4

1471-9 (3/11)

Mouser Electronics

Authorized Distributor

Click to View Pricing, Inventory, Delivery & Lifecycle Information:

TE Connectivity:

1-1102391-2