THIS DRAWING IS UNPUBLISHED. RELEASED FOR PUBLICATION - ,- .
© COPYRIGHT - By - ALL RIGHTS RESERVED.

REVISIONS

P	LTR	DESCRIPTION	DATE	DWN	APVD
	A4	REVISED PER ECO-17-001765	05MAY2017	SK	AS

TERMINAL IDENTIFICATION FOR DR SERIES ONLY
(VIEWED FROM BOTTOM OF SWITCH)

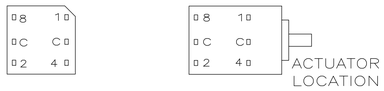

HOW TO ORDER

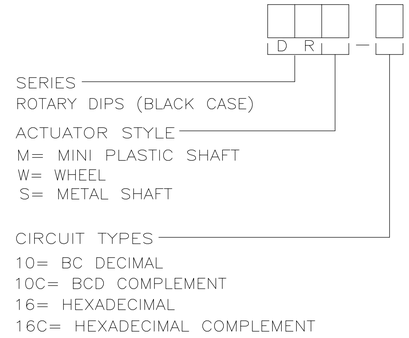

10-POSITION, BCD SEE NOTE 2

POS	0	1	2	3	4	5	6	7	8	9
C	X	X	X	X	X	X	X	X	X	X
1		X		X		X		X		X
2			X	X			X	X		
4					X	X	X	X		
8									X	X

16-POSITION, HEXADECIMAL SEE NOTE 3

POS	0	1	2	3	4	5	6	7	8	9	A	B	C	D	E	F
C	X	X	X	X	X	X	X	X	X	X	X	X	X	X	X	X
1		X		X		X		X		X		X		X		X
2			X	X			X	X			X	X			X	X
4					X	X	X	X					X	X	X	X
8									X	X	X	X	X	X	X	X

10 POSITION,
BCD COMPLEMENT SEE NOTE 4

POS	0	1	2	3	4	5	6	7	8	9
$\overline{C}$	X	X	X	X	X	X	X	X	X	X
$\overline{1}$	X		X		X		X		X	
$\overline{2}$	X	X			X	X			X	X
$\overline{4}$	X	X	X	X					X	X
$\overline{8}$	X	X	X	X	X	X	X	X		

16-POSITION,
HEXADECIMAL COMPLEMENT SEE NOTE 5

POS	0	1	2	3	4	5	6	7	8	9	A	B	C	D	E	F
$\overline{C}$	X	X	X	X	X	X	X	X	X	X	X	X	X	X	X	X
$\overline{1}$	X		X		X		X		X		X		X		X	
$\overline{2}$	X	X			X	X			X	X			X	X		
$\overline{4}$	X	X	X	X					X	X	X	X				
$\overline{8}$	X	X	X	X	X	X	X	X								

SPECIFICATIONS:

MATERIAL:

FRAME & CASE: PPS UL94V-0, BLACK
ROTOR,PPS UL94V-0, COLOR SEE P/N TABLE
FIXED CONTACT TERMINAL: COPPER ALLOY,GOLD FLASH OVER NICKEL PLATE
MOVING CONTACT:COPPER ALLOY,GOLD FLASH OVER NICKEL PLATE
BALL SUPPORT PLATE: COPPER ALLOY
BALL: STAINLESS STEEL
DETENT SPRING: STAINLESS STEEL.
BUSHING (DRS): ZINC DIE CAST.
SHAFT (DRS): COPPER ALLOY-NICKEL PLATE

ELECTRICAL:

CONTACT RATING: 0.4 VA @ 20V DC OR PEAK AC
INITIAL CONTACT RESISTANCE: 50 MILLIOHMS MAX.
INSULATION RESISTANCE: 1,000 MEGOHMS @ 100V DC.
DIELECTRIC STRENGTH: 300V AC
LIFE EXPECTANCY: 10,000 ROTATIONS

MECHANICAL:
OPERATING FORCE: 13.88 OZF.IN. MAX

ENVIRONMENTAL:

OPERATING TEMPERATURE: -30 TO +85 DEGREES C
STORAGE TEMPERATURE: -45 TO +100 DEGREES C
RESISTANCE TO SOLDER HEAT-PER 109-202, COND B (THRU-HOLE)
SOLDERABILITY- PER JIS C 0050 & JIS C 0053

NOTES:

1. COMMON TERMINALS ARE CONNECTED INTERNALLY.
2. RED ROTOR WITH WHITE PRINTING ON TOP AND SIDE OF SWITCH. "S" STYLES HAVE NOT PRINTING ON TOP.
3. BLACK ROTOR WITH WHITE PRINTING ON TOP AND SIDE OF SWITCH. "S" STYLES HAVE NO PRINTING ON TOP.
4. ORANGE ROTOR WITH WHITE PRINTING ON TOP AND SIDE OF SWITCH EXCEPT FOR THE "W" STYLES, WHICH HAVE BLACK PRINTING ON TOP. "S" STYLES HAVE NO PRINTING ON TOP.
5. WHITE ROTOR WITH WHITE PRINTING ON TOP AND SIDE OF SWITCH EXCEPT FOR THE "W" STYLES, WHICH HAVE BLACK PRINTING ON TOP. "S" STYLE HAVE NO PRINTING ON TOP.
6. ALL MATERIALS AND FINISHES SHALL COMPLY WITH EU DIRECTIVE 2002/95/EC OF 27JAN2003 (ROHS)

7 LOCATE 'ALCO' TRADE NAME AND LOT NUMBER MARKING.
LOT NUMBER TO BE MARKED AS FOLLOW:

4	F
1ST DIGIT	2ND DIGIT
YEAR 1194	MONTH 6

MARK WITH PERMANENT WHITE INK.

	ROTOR COLOR	CASE COLOR	ALCO P/N	PART NO.
	N/A	BLACK	DRS16C	5-1825033-6
	N/A	BLACK	DRS16	5-1825033-1
OBSOLETE	~~N/A~~	~~BLACK~~	~~DRS10C~~	~~4-1825033-6~~
	N/A	BLACK	DRS10	4-1825033-1
OBSOLETE	~~WHITE~~	~~BLACK~~	~~DRW16C~~	~~3-1825033-6~~
	BLACK	BLACK	DRW16	3-1825033-1
OBSOLETE	~~ORANGE~~	~~BLACK~~	~~DRW10C~~	~~2-1825033-6~~
	RED	BLACK	DRW10	2-1825033-1
OBSOLETE	~~WHITE~~	~~BLACK~~	~~DRM16C~~	~~1-1825033-6~~
	BLACK	BLACK	DRM16	1-1825033-1
OBSOLETE	~~ORANGE~~	~~BLACK~~	~~DRM10C~~	~~1825033-6~~
	RED	BLACK	DRM10	1825033-1

SEE SHEET 2 FOR DIMENSIONAL SPEC'S

THIS DRAWING IS A CONTROLLED DOCUMENT.
DIMENSIONS: INCHES
TOLERANCES UNLESS OTHERWISE SPECIFIED:
0 PLC ± -
1 PLC ± -
2 PLC ± -
3 PLC ± .010
4 PLC ± -
ANGLES ± 1°
MATERIAL -
FINISH -
DWN BSV 20JUN05
CHK MSS -
APVD - -
PRODUCT SPEC -
APPLICATION SPEC -
WEIGHT 0
CUSTOMER DRAWING
TE Connectivity
NAME ROTARY DIP SWITCH -
SIZE A1 | CAGE CODE 00779 | DRAWING NO C-1825033 | RESTRICTED TO -
SCALE 1:1 | SHEET 1 OF 2 | REV A4

4805 (1/15)

THIS DRAWING IS UNPUBLISHED. RELEASED FOR PUBLICATION - , - .
© COPYRIGHT - By - ALL RIGHTS RESERVED.

REVISIONS

P	LTR	DESCRIPTION	DATE	DWN	APVD
	-	SEE SHEET 1	-	-	-

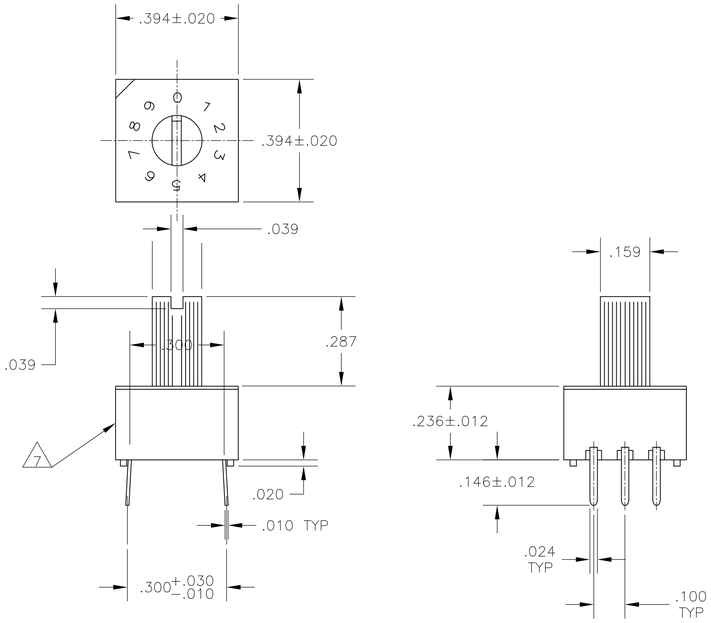

DRM
PC MOUNT

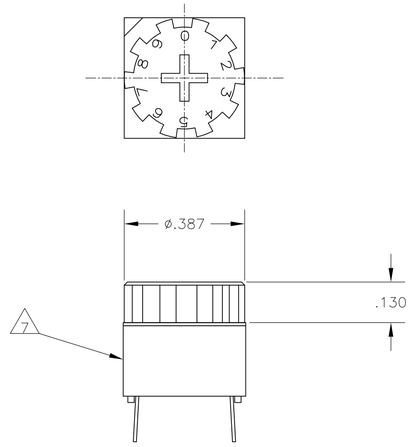

DRW
PC MOUNT

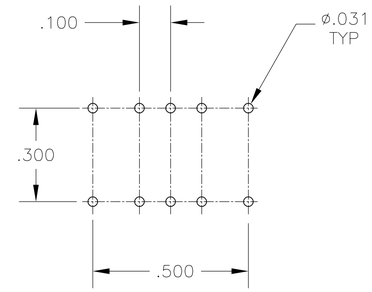

'S' STYLE VERTICAL

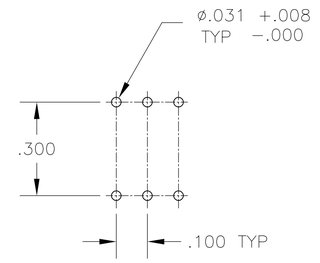

PC

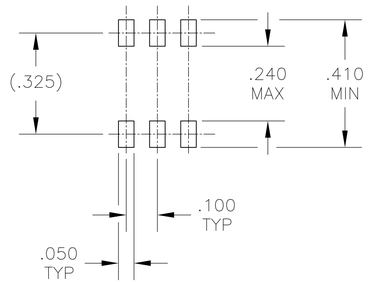

OUTSIDE "L"

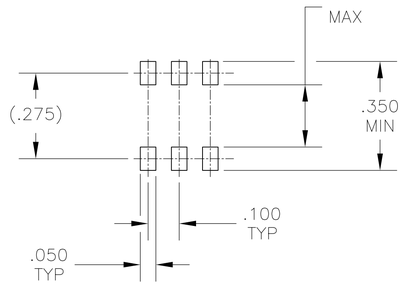

INSIDE "L"

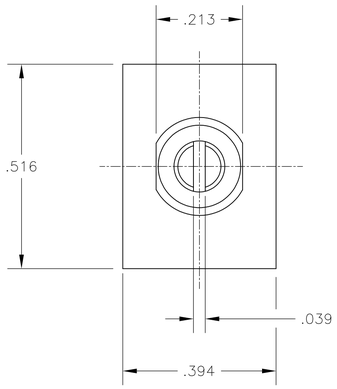

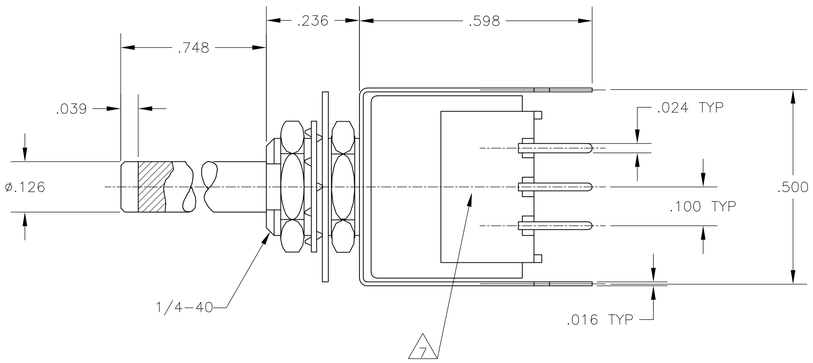

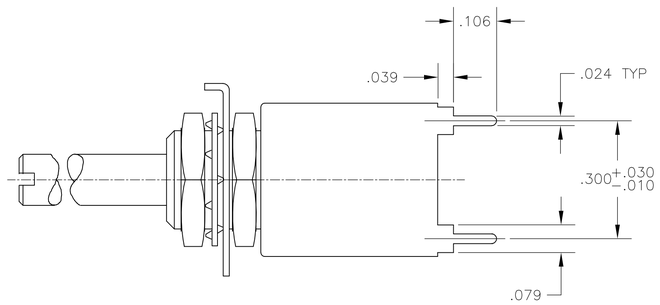

DRS
"S" STYLE VERTICAL

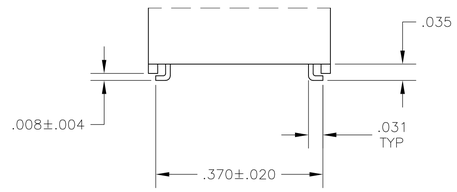

"S" OUTSIDE L TERMINAL
VERTICAL

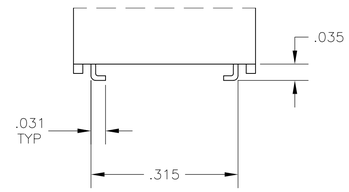

"SA" INSIDE L TERMINAL
VERTICAL

THIS DRAWING IS A CONTROLLED DOCUMENT.

DIMENSIONS: INCHES

TOLERANCES UNLESS OTHERWISE SPECIFIED:
0 PLC ± -
1 PLC ± -
2 PLC ± -
3 PLC ± .010
4 PLC ± -
ANGLES ± 1°

MATERIAL -
FINISH -

DWN BSV 20JUN05
CHK MSS -
APVD - -
PRODUCT SPEC -
APPLICATION SPEC -
WEIGHT 0
CUSTOMER DRAWING

TE Connectivity

NAME
ROTARY
DIP SWITCH
-

SIZE	CAGE CODE	DRAWING NO	RESTRICTED TO
A1	00779	C-1825033	-

SCALE 4:1 SHEET 2 OF 2 REV A4

4805 (1/15)

Mouser Electronics

Authorized Distributor

Click to View Pricing, Inventory, Delivery & Lifecycle Information:

TE Connectivity:

DRS1604