PRODUCT NUMBER

98451–YXX–XXLF

- WHEN REQUIRED, ADD SUFFIX LETTER "LF" INDICATES THE PRODUCT IS RoHS COMPLIANT & COMPATIBLE, SEE NOTE 7
- TOTAL NB OF POSITIONS 04 TO 72
- PACKAGING OPTIONS, NOTE 3
- PLATING:

| PIN STYLE | "A" ±0.25 | "F" ±0.25 |
|---|---|---|
| 01 | 5.4 | 7.8 |

1 = 0.76µm FULL GOLD, OVER 1.27µm Ni MIN

3 = 3.81µm FULL TIN/LEAD OVER 1.27µm Ni MIN.
WHEN "LF" IS REQUIRED, 2µm MATTE TIN OVER 1.27µm MIN NICKEL IS PROVIDED INSTEAD OF TIN–LEAD

8 = 0.38µm FULL GOLD, OVER 1.27µm Ni MIN

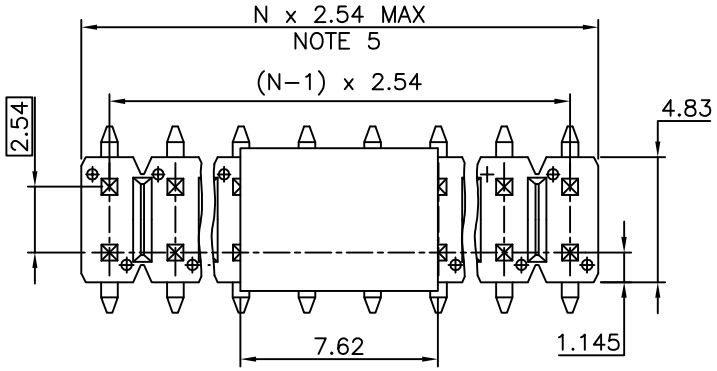


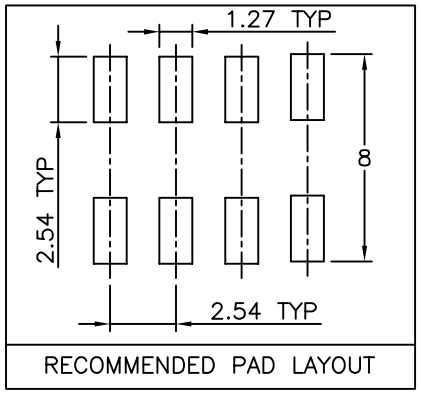


NOTES:

1. HOUSING MAT'L : HIGH TEMPERATURE THERMOPLASTIC. UL94V–0 COLOR: BLACK
2. PIN MATERIAL : PHOSPHOR BRONZE
3. PACKAGING OPTIONS:
   – = POLY BAGS
   A = TAPE & REEL WITH PICK UP CAP, AS AVAILABLE
4. 9N MIN RETENTION IN EITHER DIRECTION
5. TO DETERMINE DIMENSIONS :
   N = NUMBER OF POSITIONS PER ROW
   EXAMPLE : 8 POS PER ROW, N x 2.54 = 20.32mm
6. RECOMMENDED IR PROFILE PER TA–842
7. RoHS COMPATIBLE PRODUCT SPECIFICATIONS
   a – PLATING:
   – "LF" MEANS THE PRODUCT IS LEAD–FREE, 2µm MINIMUM MATTE TIN OVER 1.27µm MINIMUM NICKEL UNDERPLATE.
   b – MANUFACTURING PROCESS COMPATIBILITY
   – THE HOUSING WILL WITHSTAND EXPOSURE TO 260°C PEAK TEMPERATURE FOR 30 SECONDS MAX IN A CONVECTION, INFRA–RED OR VAPOR PHASE OR REFLOW OVEN.
   c – LABELLING:
   – MEETS PACKAGING SPECS AS PER GS–14–920
   d – THIS PRODUCT MEETS EUROPEAN UNION DIRECTIVES AND OTHER COUNTRY REGULATIONS AS DESCRIBED IN GS–22–008

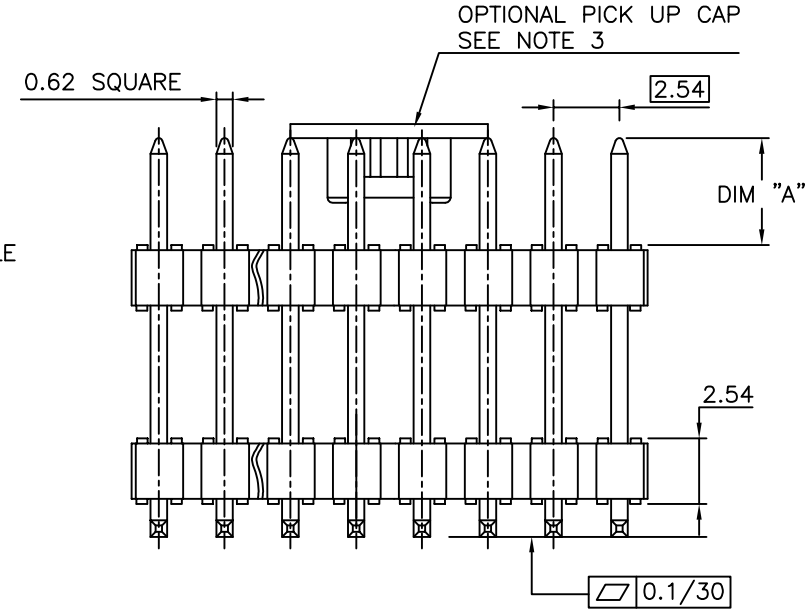


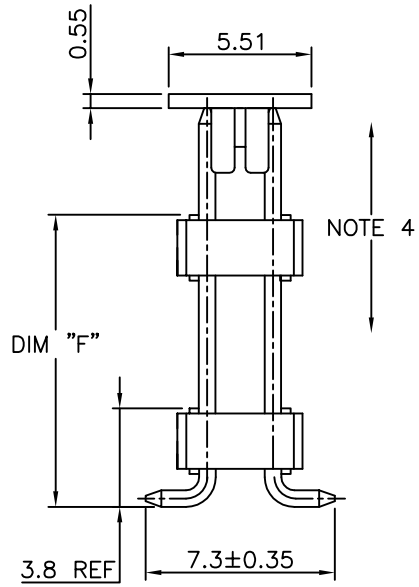


| ltr | ecn no | dr | date |
|---|---|---|---|
| A | F00143 | LMU | 00.03.01 |
| B | F00171 | LMU | 27.03.00 |
| C | F20116 | DLE | 02.01.17 |
| D | F20149 | DLE | 02.02.19 |
| E | F06–0166 | LMU | 06.04.14 |
| F | F06–0208 | JCO | 06.06.22 |
| G | F–23186 | AMA | 16.02.01 |

mat'l. code

surface ISO 1302 ✓ | tolerance ISO 406 ISO 1101 | projection

tolerances unless otherwise specified: angles; linear x.x ±0.3, x.xx ±0.13, x.xxx ±0.05

mm | scale 5:1

| | | | |
|---|---|---|---|
| dr | MULIN.L | | 99.07.21 |
| engr | COMPAGNON.J | | 99.07.21 |
| chr | | | |
| appd | JM.C | | 99.07.21 |

product family: BERGSTIK

title: HDR, DR, DB
SURFACE MOUNT

dwg no: 98451 | sheet 1 of 1 | size A3

type: CUSTOMER Drawing

sheet index | revision sheet

form: A3

FCIconnect.com
Copyright FCI
PDS: Rev :G STATUS:Released Printed: Feb 08, 2016

# Mouser Electronics

Authorized Distributor

Click to View Pricing, Inventory, Delivery & Lifecycle Information:

FCI / Amphenol:

98451-103-06LF 98451-103-20LF 10139134-903ALF 10139134-903BLF