THIS DRAWING IS UNPUBLISHED. RELEASED FOR PUBLICATION -,- .
© COPYRIGHT - By - ALL RIGHTS RESERVED.

LOC	DIST
—	AP

CAD AutoCAD — DO NOT REVISE EXCEPT BY CAD

REVISIONS / REVISÕES

P	LTR LT	DESCRIPTION DESRIÇÃO	DATE DATA	DWN DES	APVD APR
	F1	REVISED DESIGN ECO-11-015971	11AUG2011	NCL	MG
	F2	REVISED DESIGN ECO-12-001803	07FEB2012	NCL	GOJ

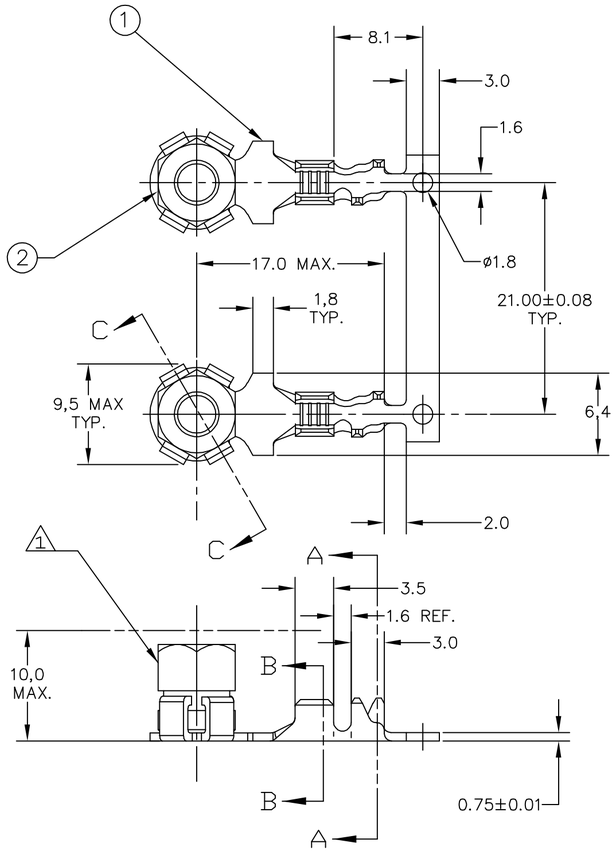

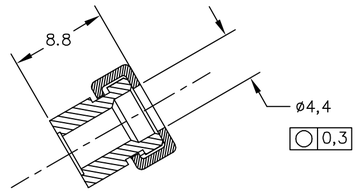

SECTION C–C

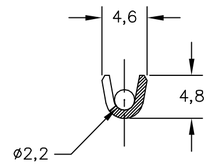

SECTION A–A

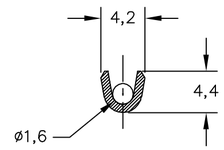

SECTION B–B

1 – PORCA SEXTAVADA SW7xM4, AUTO TRAVANTE, AÇO BAIXO CARBONO, ZINCADO BICROMATIZADO (CROMO TRIVALENTE)
– SW7x M4 SELF LOCKING, HEXAGONAL NUT, LOW CARBON STEEL, ZINC PLATING BICHROMATED (TRIVALENT CHROMIUM).

2 – GARRA DO CONDUTOR PARA "F" CRIMP E GARRA DO ISOLANTE PARA "O" CRIMP.
– WIRE BARREL FOR "F" CRIMP AND INSULATION FOR "O" CRIMP.

3 – ALTURAS E LARGURAS DE FECHAMENTO PARA 14AWG / 16AWG.
CONDUTOR (CRIMP WIDTH): ISOLANTE (INSULATION CRIMP WIDTH)
LARGURA: .130 "F" .140"O"

ALTURA (CRIMP HEIGHT): 14AWG – 2,54mm.
16AWG – 2,36mm.

4 – TORQUE ESPECIFICADO PARA PORCA DO TERMINAL É 3,0Nm±0,5Nm.
THE TORQUE SPECIFIED FOR NUT TERMINAL IS 3,0Nm±0,5Nm.

5 – PORCA SEXTAVADA SW7xM4, AÇO BAIXO CARBONO, ZINCADO BICROMATIZADO (CROMO TRIVALENTE).
– HEXAGONAL NUT SW7xM4, LOW CARBON STEEL, ZINC PLATING BICHROMATED (TRIVALENT CHROMIUM).

6 – PORCA SEXTAVADA SW7xM4, AUTO TRAVANTE, LATÃO, Cu Zn38 Pb1,5, SEM ACABAMENTO.
– HEXAGONAL NUT SW7xM4, SELF LOCKING, BRASS Cu Zn38 Pb1,5, WITHOUT PLATING.

7 – PORCA SEXTAVADA SW7xM4, LATÃO (CuZn38 Pb1,5) SEM ACABAMENTO.
– HEXAGONAL NUT SW7xM4, BRASS (CuZn38 Pb1,5) WITHOUT PLATING.

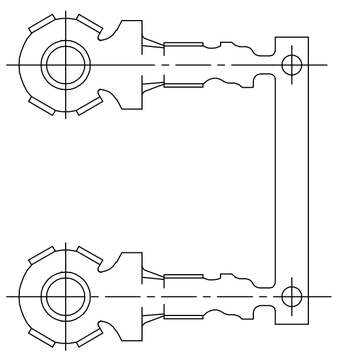

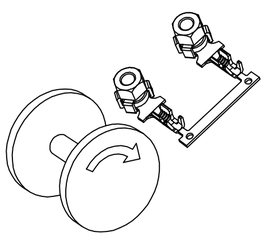

DIRECTION OFF TOP OF REEL
TYCO SPEC. 107-3 FIG.1

				OBSOLETE		ITEM	DESCRIPTION	MATERIAL	FINISH
1	–	–	–	–	–	5	NUT M4	7	7
–	1	–	–	–	–	4	NUT M4	6	6
–	–	1	–	–	–	3	NUT M4	5	5
–	–	–	1	–	1	2	NUT M4	1	1
1	1	1	1	–	1	1	TERMINAL RING TONGUE	BRONZE PHOS.	PRE-TIN/PRE-ESTANHADO
–5	–4	–3	–2	–	–1				

14–16 AWG	ø1,90–2,40	REQ. PER ASSY —
WIRE RANGE	INS. RANGE	1599297

THIS DRAWING IS A CONTROLLED DOCUMENT.

DIMENSIONS: DIMENSÕES mm

MATERIAL –

TOLERANCES UNLESS OTHERWISE SPECIFIED: TOLERANCIA NÃO ESPECIFICADAS
0 PLC/DEC ± –
1 PLC/DEC ± 0,3
2 PLC/DEC ± –
3 PLC/DEC ± –
4 PLC/DEC ± –
ANGLES/ANGULARES ±1°
FINISH ACABAMENTO –

DWN/DES N.C.LAPRESA 21JAN2004
CHK/CH P.L.FARIA 02DEC2003
APVD/APR N.M.SANTOS 02DEC2003
PRODUCT SPEC —
APPLICATION SPEC —
WEIGHT —

TE Connectivity

NAME DESRIÇÃO: ASSY.,TERMINAL RING TONGUE, M4

SIZE	CAGE CODE	DRAWING NO DESENHO NO	RESTRICTED TO
A2	00779	C-1599297	—

CUSTOMER DRAWING/DESENHO DE CLIENTE | SCALE ESCALA 5:1 | SHEET FOLHA 1 OF 1 | REV F2

1471-9 (3/11)

Mouser Electronics

Authorized Distributor

Click to View Pricing, Inventory, Delivery & Lifecycle Information:

TE Connectivity:

1599297-3