THIS DRAWING IS UNPUBLISHED. RELEASED FOR PUBLICATION -,- .
© COPYRIGHT - By - ALL RIGHTS RESERVED.

LOC	DIST
G	14

REVISIONS

P	LTR	DESCRIPTION	DATE	DWN	APVD
	N1	REVISED PER ECO-11-004917	11MAR11	RK	HMR

AMP WIRE RANGE	Listed FILE E13288	LR7189 Certified
16-14 AWG SOLID OR STRANDED	16-14 AWG SOLID OR STRANDED	16-14 AWG SOLID OR STRANDED

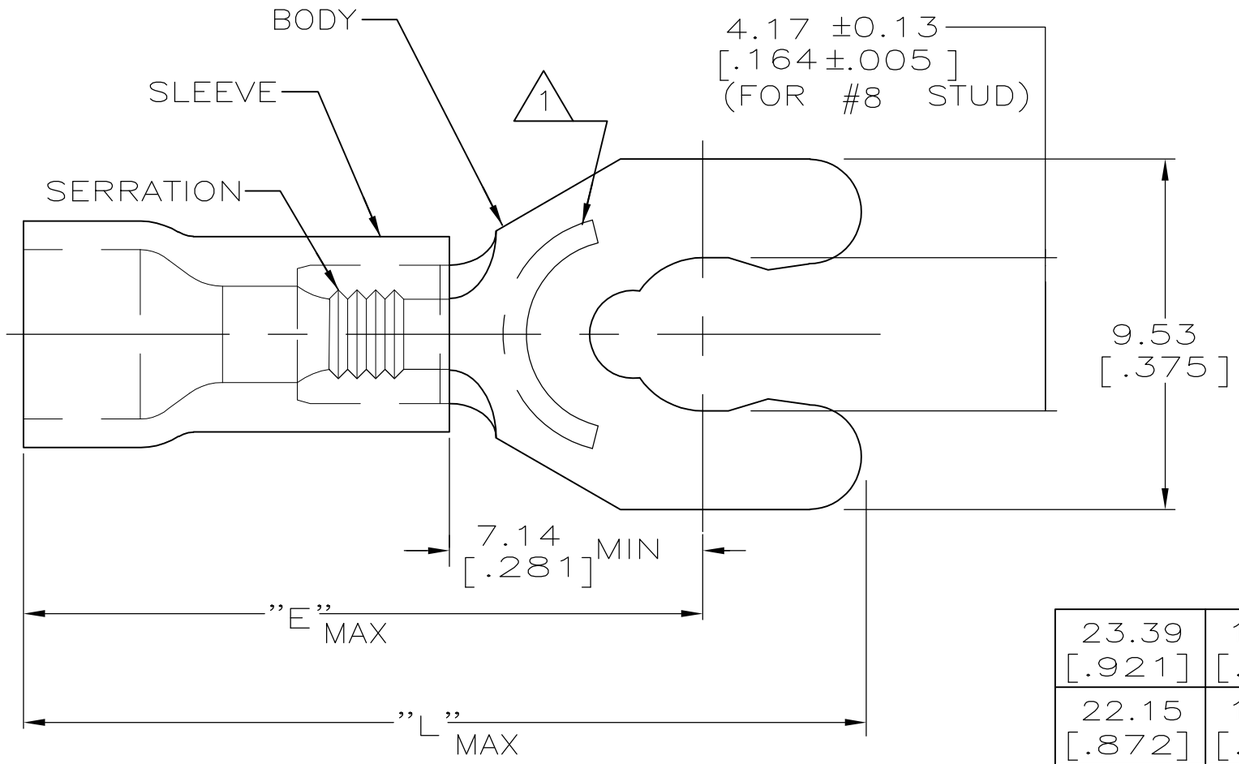

1. STAMP 8SAMP 16-14* APPROX AS SHOWN
2. SEE TABLE FOR WIRE INSUL DIA
3. TONGUE MATL THK, 0.79±0.05 [.031±.002]
4. MATERIAL: BODY - BRASS PER ASTM B-36
   SLEEVE - PVC, COLOR - BLUE

L	E	WIRE INSUL DIA	QTY	PACKAGE TYPE	PART NO
23.39 [.921]	18.95 [.746]	3.81-6.35 [.150-.250]	100	LOOSE PIECE,BOX	9-52956-1
22.15 [.872]	17.70 [.697]	3.00-4.90 [.118-.193]	100	LOOSE PIECE,BOX	7-52956-1
23.39 [.921]	18.95 [.746]	3.81-6.35 [.150-.250]	2500	ON TAPE, REEL	52956-3
23.39 [.921]	18.95 [.746]	3.81-6.35 [.150-.250]	1000	LOOSE PIECE	52956-2
22.15 [.872]	17.70 [.697]	3.00-4.90 [.118-.193]	5000	ON TAPE, REEL	52956-1
22.15 [.872]	17.70 [.697]	3.00-4.90 [.118-.193]	1000	LOOSE PIECE	52956

AMP INCORPORATED
CUSTOMER SERVICE SYSTEMS

FOR ADDITIONAL PRODUCT INFORMATION OR COPIES OF DRAWINGS AND TECHNICAL DOCUMENTS	PRODUCT INFORMATION CENTER 1-800-522-6752
FOR APPLICATION TOOLING INFORMATION	TOOLING ASSISTANCE CENTER 1-800-722-1111
FOR ORDER ENTRY	1-800-526-5142

THIS DRAWING IS A CONTROLLED DOCUMENT FOR AMP INCORPORATED. IT IS SUBJECT TO CHANGE AND THE CONTROLLING ENGINEERING ORGANIZATION SHOULD BE CONTACTED FOR THE LATEST REVISION.

MAX RECOMMENDED OPERATING TEMPERATURE: 105°C [221° F]

VOLTAGE RATING: 600V MAX (1000V FIXTURE OR SIGN)

CIRCULAR MIL AREA: 1.04-2.62mm² [2,050-5,180] SOLID OR STRANDED

THIS DRAWING IS A CONTROLLED DOCUMENT.

DIMENSIONS: mm[INCHES]

TOLERANCES UNLESS OTHERWISE SPECIFIED:
0 PLC ± -
1 PLC ± -
2 PLC ± 0.20 [.008]
3 PLC ± -
4 PLC ± -
ANGLES ± -

MATERIAL 4

FINISH TIN PER ASTM B545

DWN	L OLMEDA	26JUN95
CHK	M ELLIS	26JUN95
APVD	G NGO	26JUN95
PRODUCT SPEC	UL 486A	
APPLICATION SPEC	—	
WEIGHT	—	

TE Connectivity

NAME: TERMINAL, SPRING SPADE, SHORT, PLASTI-GRIP, WIRE SIZE: 16-14

SIZE	CAGE CODE	DRAWING NO	RESTRICTED TO
A3	00779	C-52956	—

CUSTOMER DRAWING | SCALE 6:1 | SHEET 1 OF 1 | REV N1

1470-19 (3/11)

Mouser Electronics

Authorized Distributor

Click to View Pricing, Inventory, Delivery & Lifecycle Information:

TE Connectivity:
52956