PLEASE CHECK WWW.MOLEX.COM FOR LATEST PART INFORMATION

Part Number: 0542800609

Status: Active

Description: 2.00mm Pitch Serial I/O Connector, Receptacle Kit, Wire-to-Wire, Solder Type, 6 Circuits

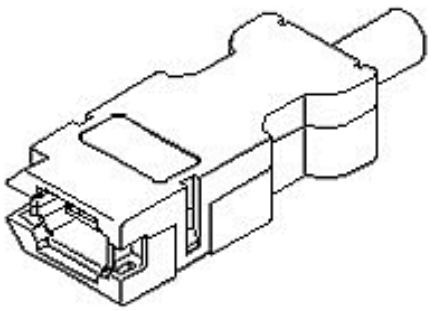

Series image - Reference only

Documents:

- 3D Model
- Drawing (PDF)
- Product Specification PS-54280-005-001 (PDF)
- Application Specification 5006540609AS-A00 (PDF)
- Application Specification 551000680AS-A00 (PDF)
- RoHS Certificate of Compliance (PDF)

General	
Product Family	I/O Connectors
Series	54280
Application	Wire-to-Wire
Component Type	Receptacle
Product Name	N/A
Type	N/A
UPC	822348189182
Physical	
Circuits (Loaded)	6
Circuits (maximum)	6
Color - Resin	Black, Gray
Durability (mating cycles max)	1500
Lock to Mating Part	Yes
Material - Metal	Phosphor Bronze, Steel
Material - Plating Mating	Gold
Material - Plating Termination	Tin
Material - Resin	High Temperature Thermoplastic, Polycarbonate
Net Weight	10421.894/mg
Orientation	Vertical
Packaging Type	Bag
Panel Mount	No
Pitch - Mating Interface	2.00mm
Plating min - Mating	0.762µm
Plating min - Termination	3.048µm
Polarized to Mating Part	Yes
Surface Mount Compatible (SMC)	N/A
Temperature Range - Operating	-40° to +85°C
Termination Interface: Style	N/A
Wire Insulation Diameter	2.10mm max.
Wire Size AWG	16, 18, 20, 22, 24, 26, 28
Electrical	
Current - Maximum per Contact	2.0A
Shielded	Yes
Voltage - Maximum	125V AC (RMS)/DC
Material Info	
Reference - Drawing Numbers	
Application Specification	5006540609AS-A00, 551000680AS-A00
Product Specification	PS-54280-005-001
Sales Drawing	SD-54280-008, SD-54280-011-001

EU ELV
Not Relevant

EU RoHS
Compliant

China RoHS

REACH SVHC
Not Contained Per - ED/61/2018 (27 June 2018)

Halogen-Free Status
Not Low-Halogen

For more information, please visit Contact US

China ROHS	Green Image
ELV	Not Relevant
RoHS Phthalates	Not Contained

Search Parts in this Series
54280 Series

Mates With
2.00mm Pitch Serial I/O Connector 55100-0670 , 500654-0609
 Crimp Terminal 50639-8028

PLEASE CHECK WWW.MOLEX.COM FOR LATEST PART INFORMATION

Mouser Electronics

Authorized Distributor

Click to View Pricing, Inventory, Delivery & Lifecycle Information:

Molex:
54280-0609